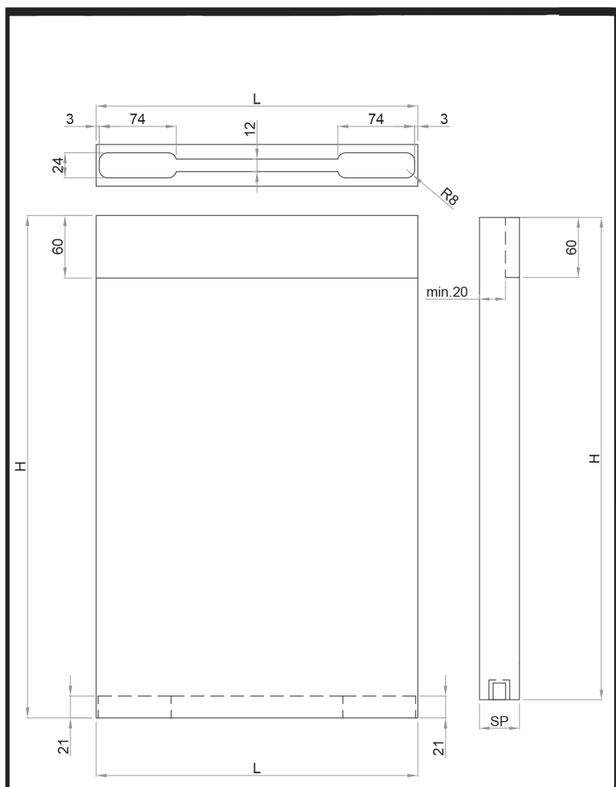

MESURES DE COUPE DE PROFILÉS
PROFILES CUTTING MESUREMENTS

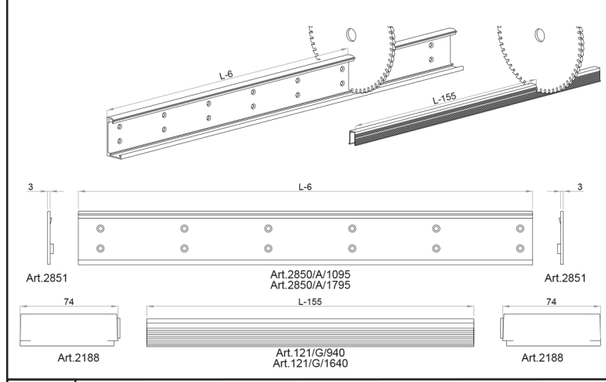

1

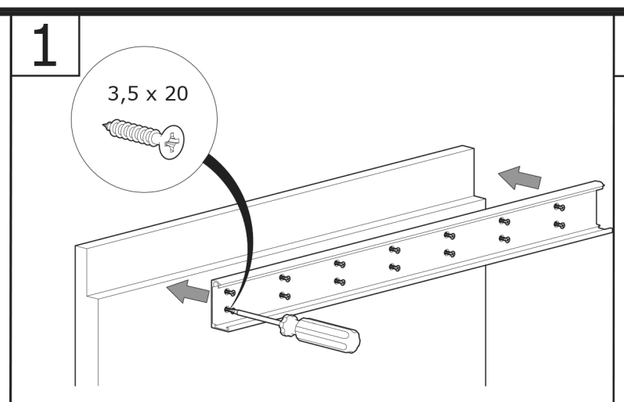

2

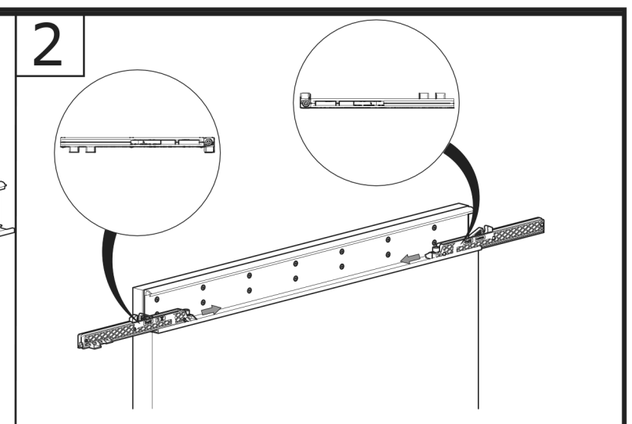

3

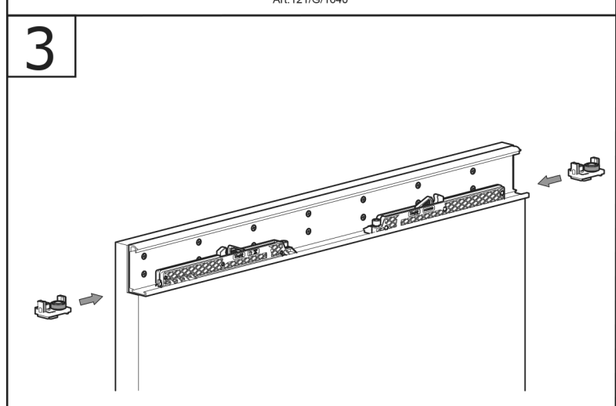

4

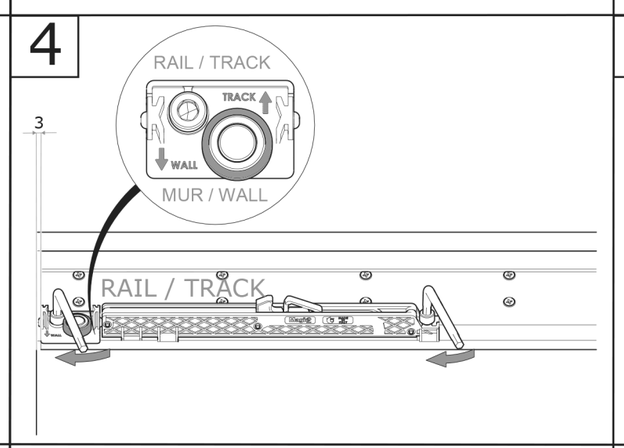

5

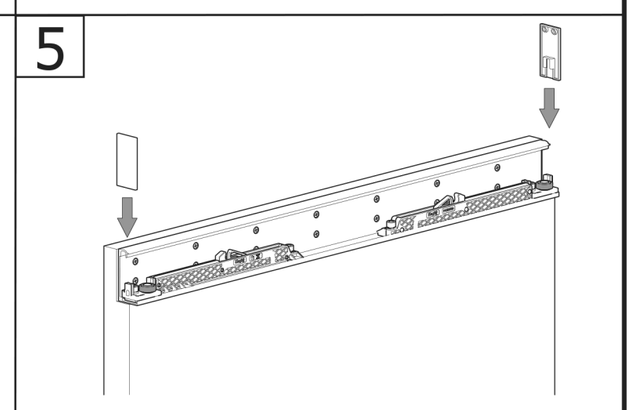

OPTIONNEL / OPTIONAL

FRAISAGE DISSIMULÉ
CONCEALED MILLING

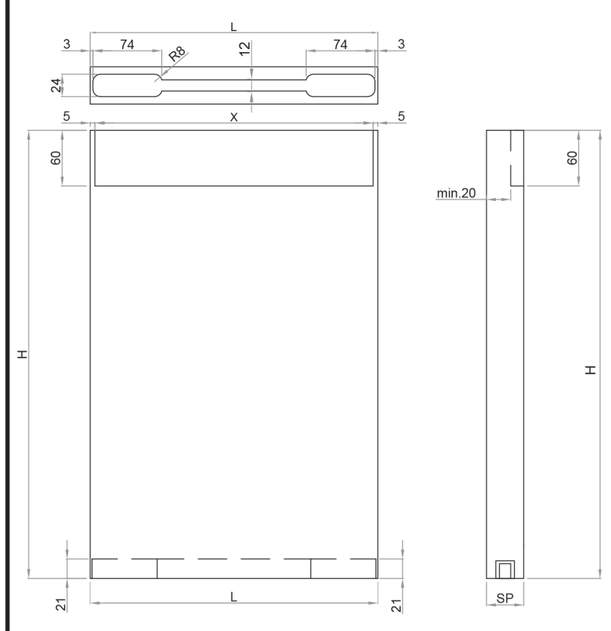

MESURES DE COUPE DES PROFILÉS
PROFILES CUTTING MESUREMENTS

OPTIONNEL
OPTIONAL

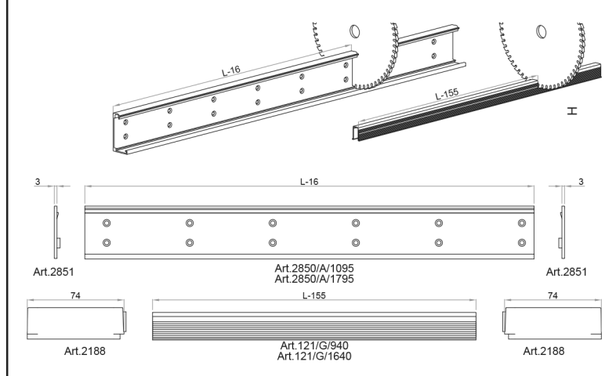

RAIL DE MONTAGE ET ACCESSOIRES
MOUNTING TRACK AND ACCESSORIES

OPTIONNEL
OPTIONAL

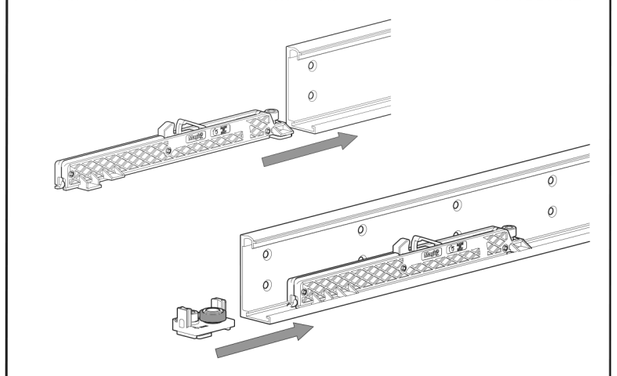

OPTIONNEL
OPTIONAL

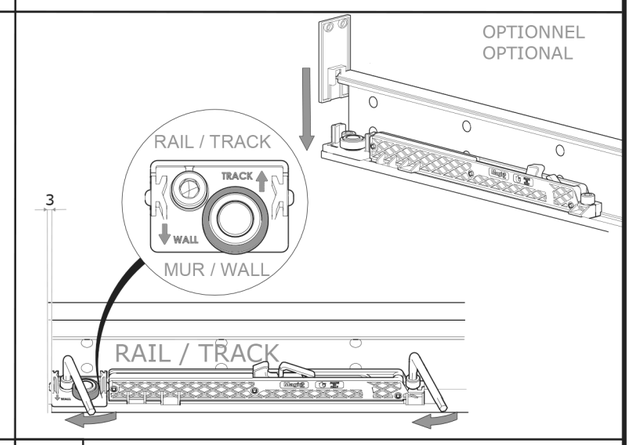

OPTIONNEL
OPTIONAL

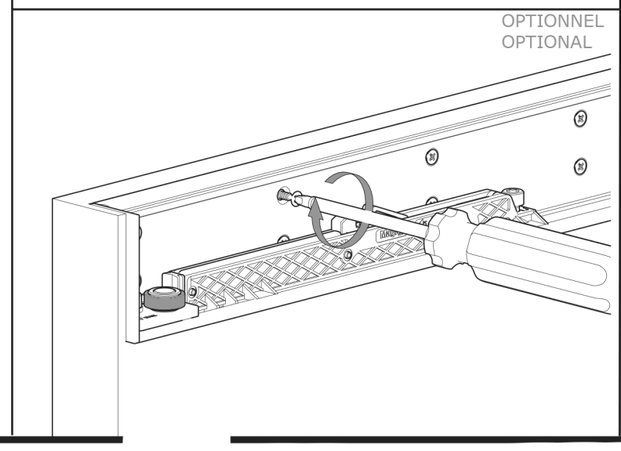

6

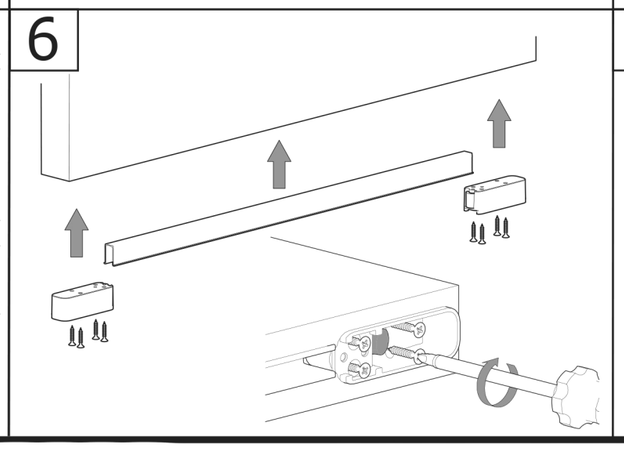

7

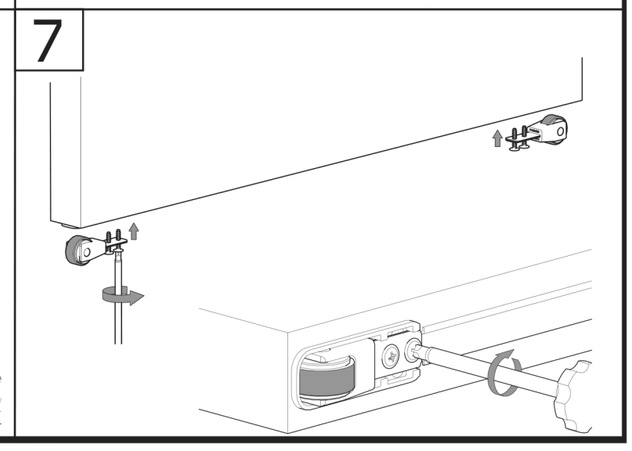

1400/1100	
B = 0	X = Min.800mm (L=850) X = Max.1050mm (L=1100)
B = 50	X = Min.800mm (L=900) X = Max.1000mm (L=1100)
1400/1800	
B = 0	X = Min.800mm (L=850) X = Max.1750mm (L=1800)
B = 50	X = Min.800mm (L=900) X = Max.1700mm (L=1800)

B = 0mm MIN.
B = 50mm SUGGERE *(SUGGESTED)*

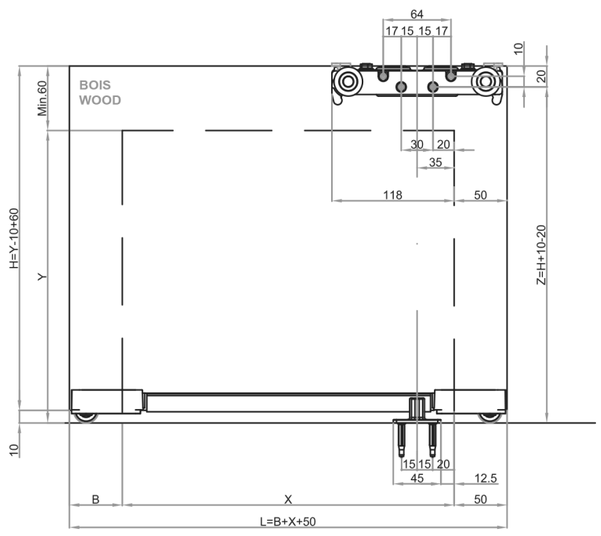

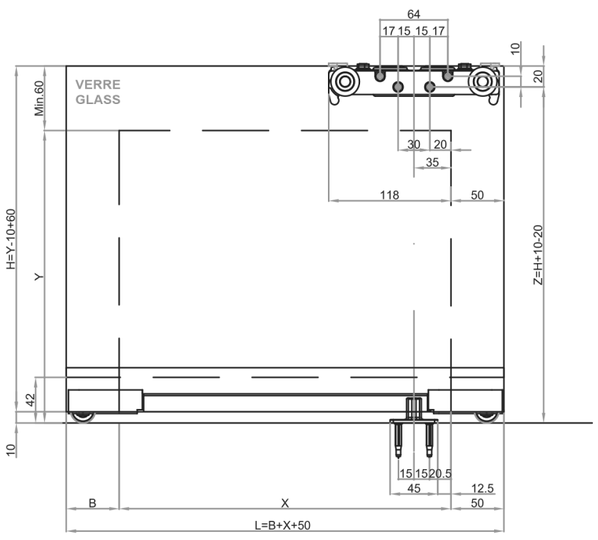

OUVERTURE VERS LA GAUCHE
LEFT OPENING

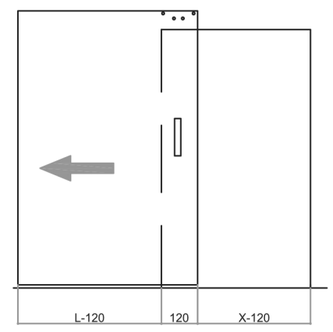

OUVERTURE VERS LA DROITE
RIGHT OPENING

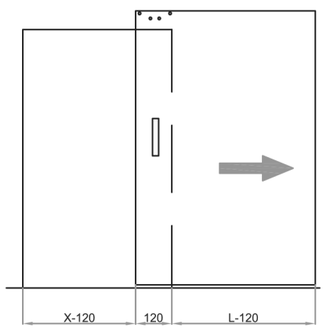

1400/1100	
B = 0	X = Min.740mm (L=850) X = Max.990mm (L=1100)
B = 50	X = Min.740mm (L=900) X = Max.940mm (L=1100)
1400/1800	
B = 0	X = Min.740mm (L=850) X = Max.1690mm (L=1800)
B = 50	X = Min.740mm (L=900) X = Max.1640mm (L=1800)

B = 0mm MIN.
B = 50mm SUGGERE *(SUGGESTED)*

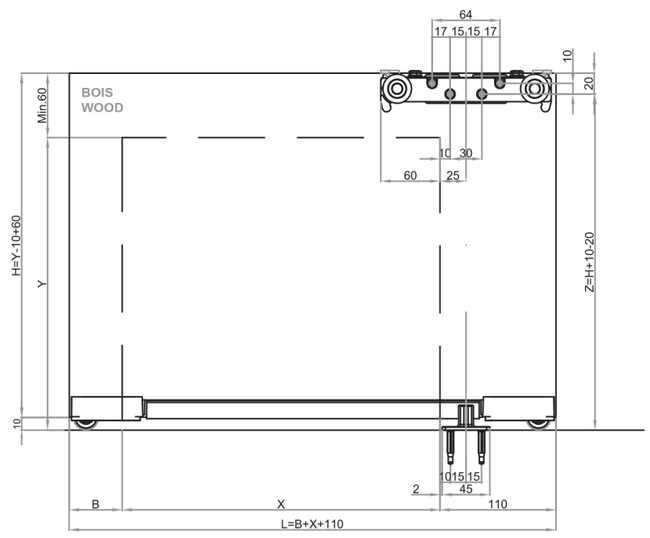

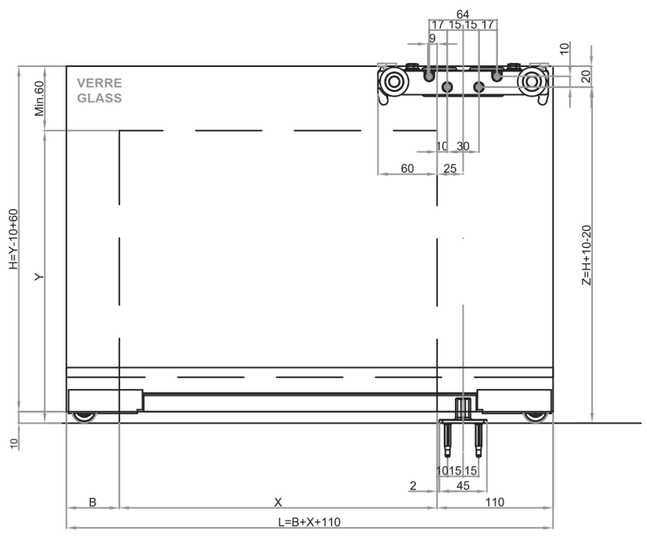

OUVERTURE VERS LA GAUCHE
LEFT OPENING

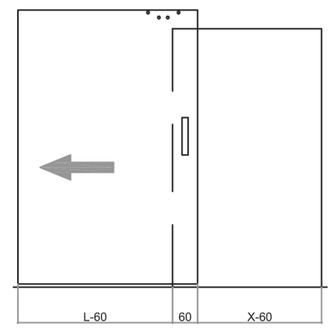

OUVERTURE VERS LA DROITE
RIGHT OPENING

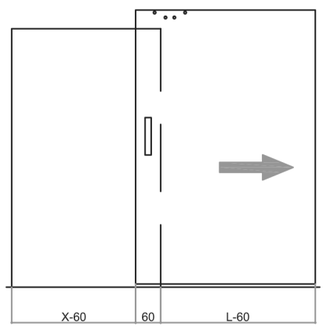

1400/1100	
B = 0	X = Min.680mm (L=850) X = Max.930mm (L=1100)
B = 50	X = Min.680mm (L=900) X = Max.880mm (L=1100)
1400/1800	
B = 0	X = Min.680mm (L=850) X = Max.1630mm (L=1800)
B = 50	X = Min.680mm (L=900) X = Max.1580mm (L=1800)

B = 0mm MIN.
B = 50mm SUGGERE *(SUGGESTED)*

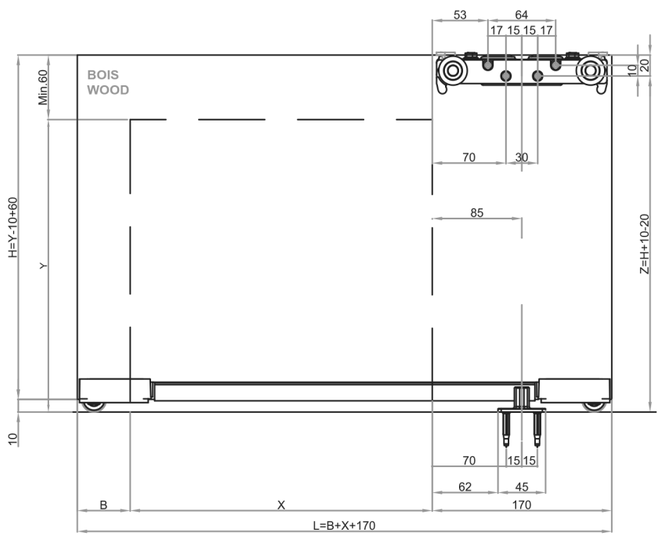

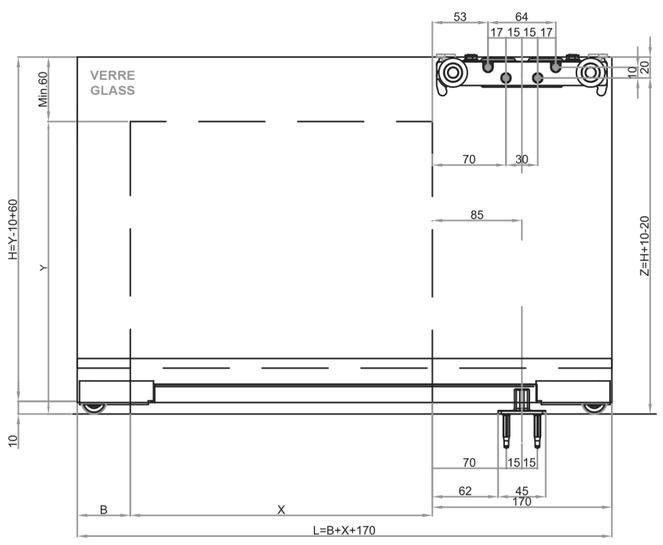

OUVERTURE VERS LA GAUCHE
LEFT OPENING

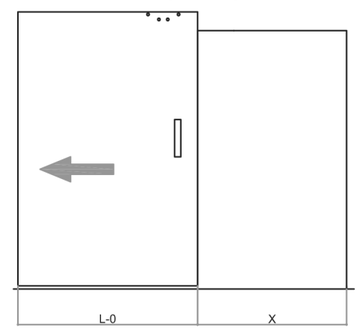
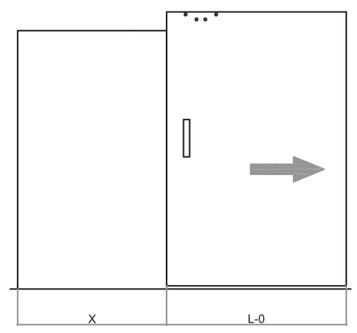
OUVERTURE VERS LA DROITE
RIGHT OPENING