Ironw@re

Onzichtbaar schuifdeursysteem
Glas in frame

More than 50mm of damping motion

The system integrates new dampers with 50 mm of braking motion, 20 mm longer than previous version, while keeping the same door dimensions.

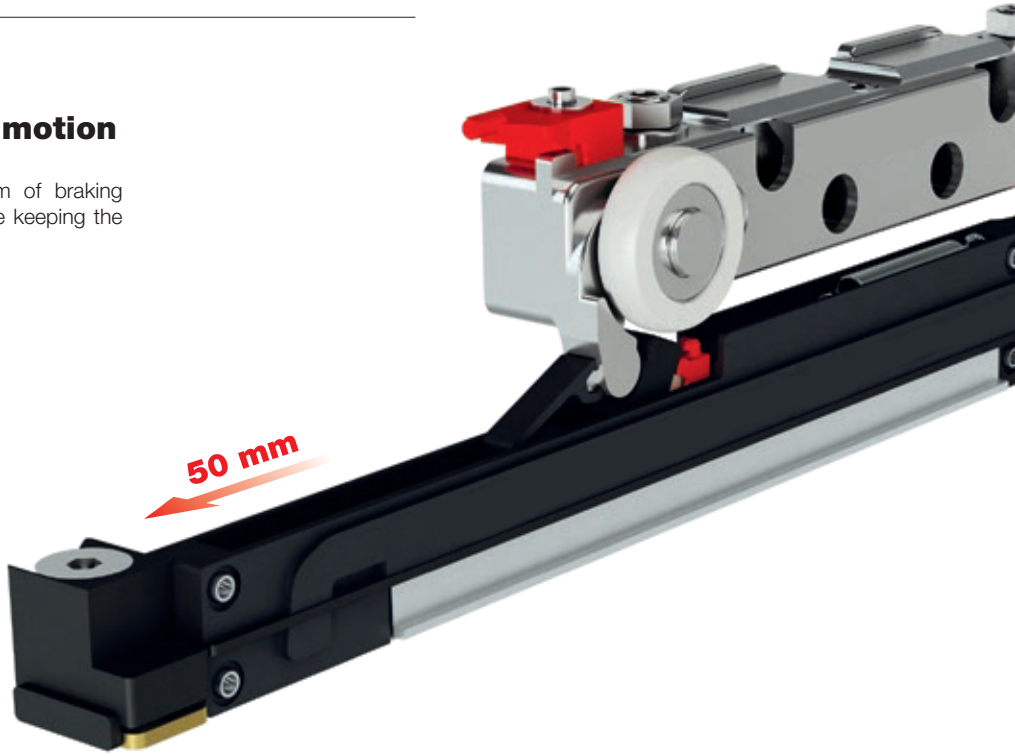

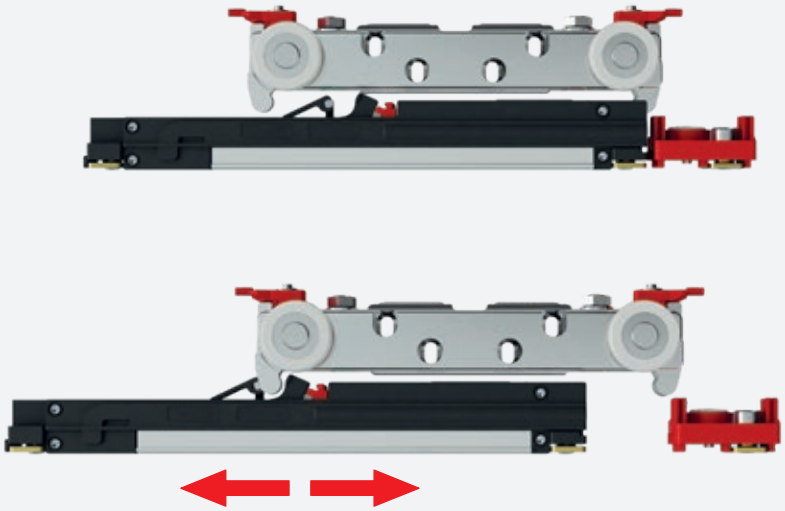

New dampers with adjustable positioning

New adjustable dampers were designed to be independent from wall-spacer wheels. New dampers are suitable to be moved into the track to allow door positioning adjustment.

New position of wall-spacer wheels

System wall-spacer wheels are positioned on the door extremities. The wall-spacer wheels are so positioned in order to protect the door from wall contact, when wall surface are not plane.

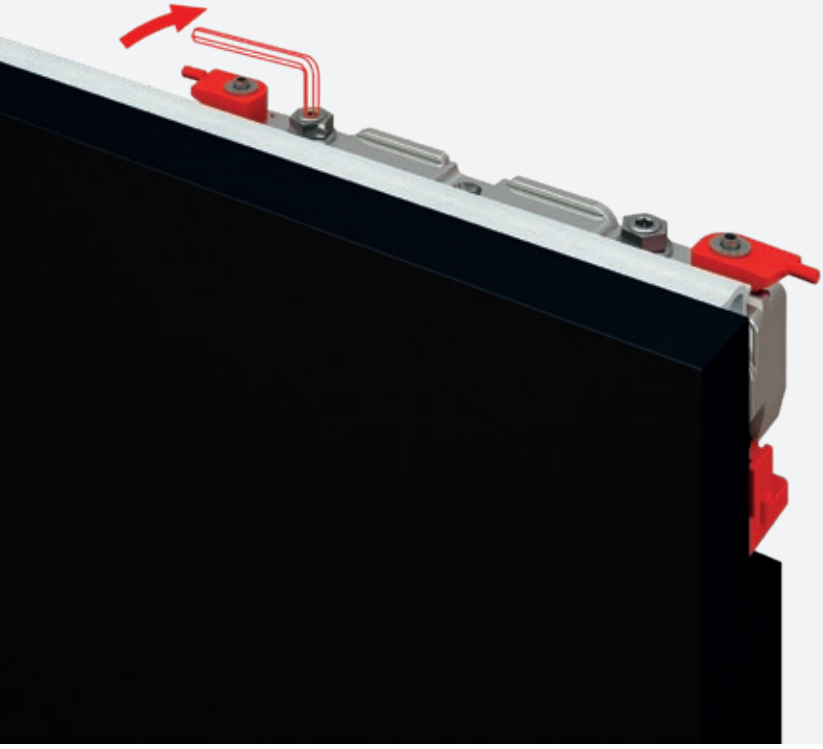

New patented adjustment system

New sliding trolley integrates following door adjustments:

- Door height adjustment from floor
- Micrometic adjustment of door from wall
- Micrometic adjustment of door parallelism from wall

Door adjustments of wall distance and parallelism, are meant to compensate possible irregularities of wall. All adjustments are available in the top of sliding trolley, without removing the door.

Practical anti-jumping system

sliding trolley includes two new turning anti-jumping activation elements. Turning anti-jumping activation elements are equipped with two safety levers, easy to rotate with no tools required. Safety levers, clearly visible, will have to be removed once anti-jumping system is activated in order to insert end caps.

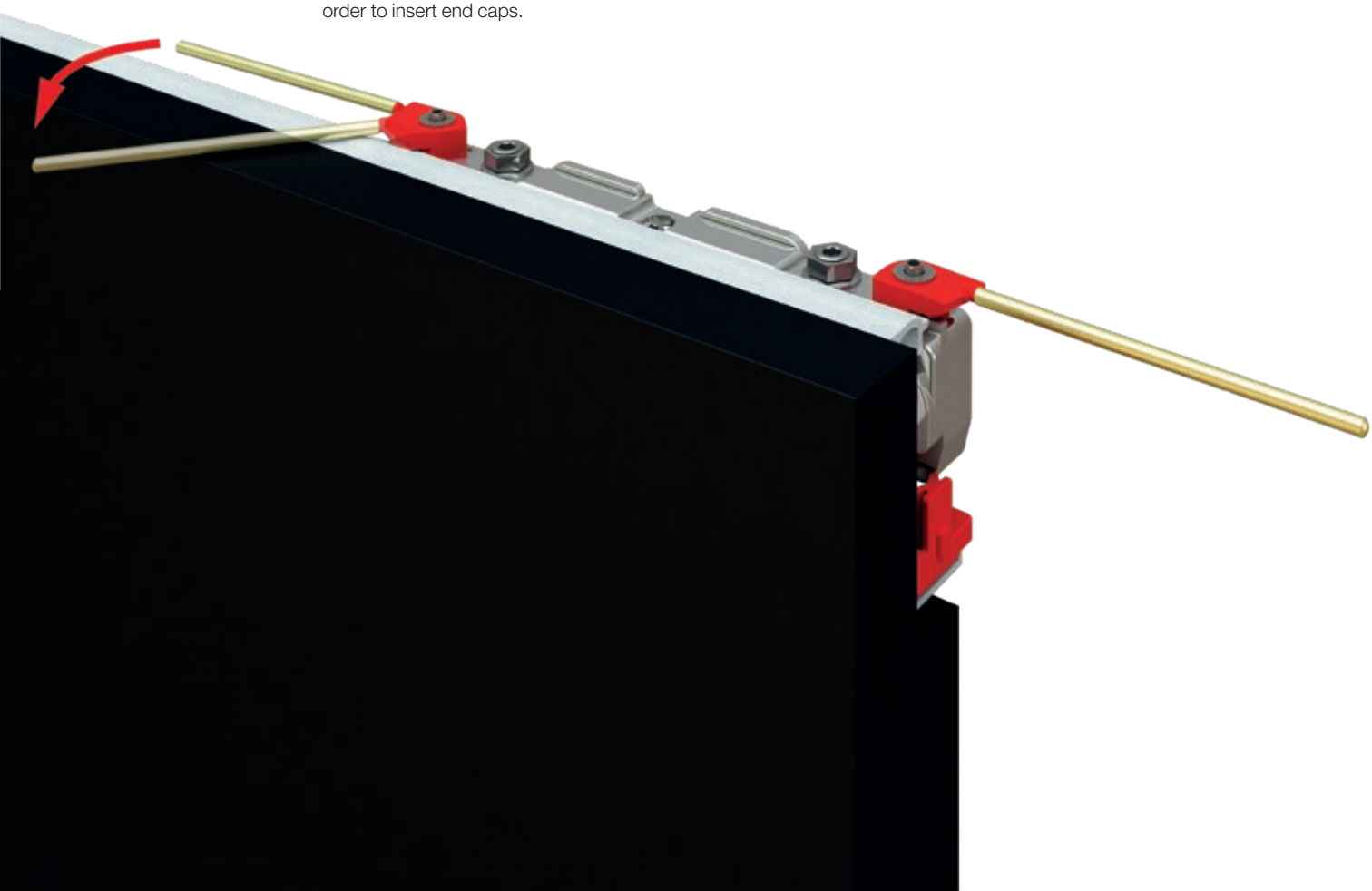

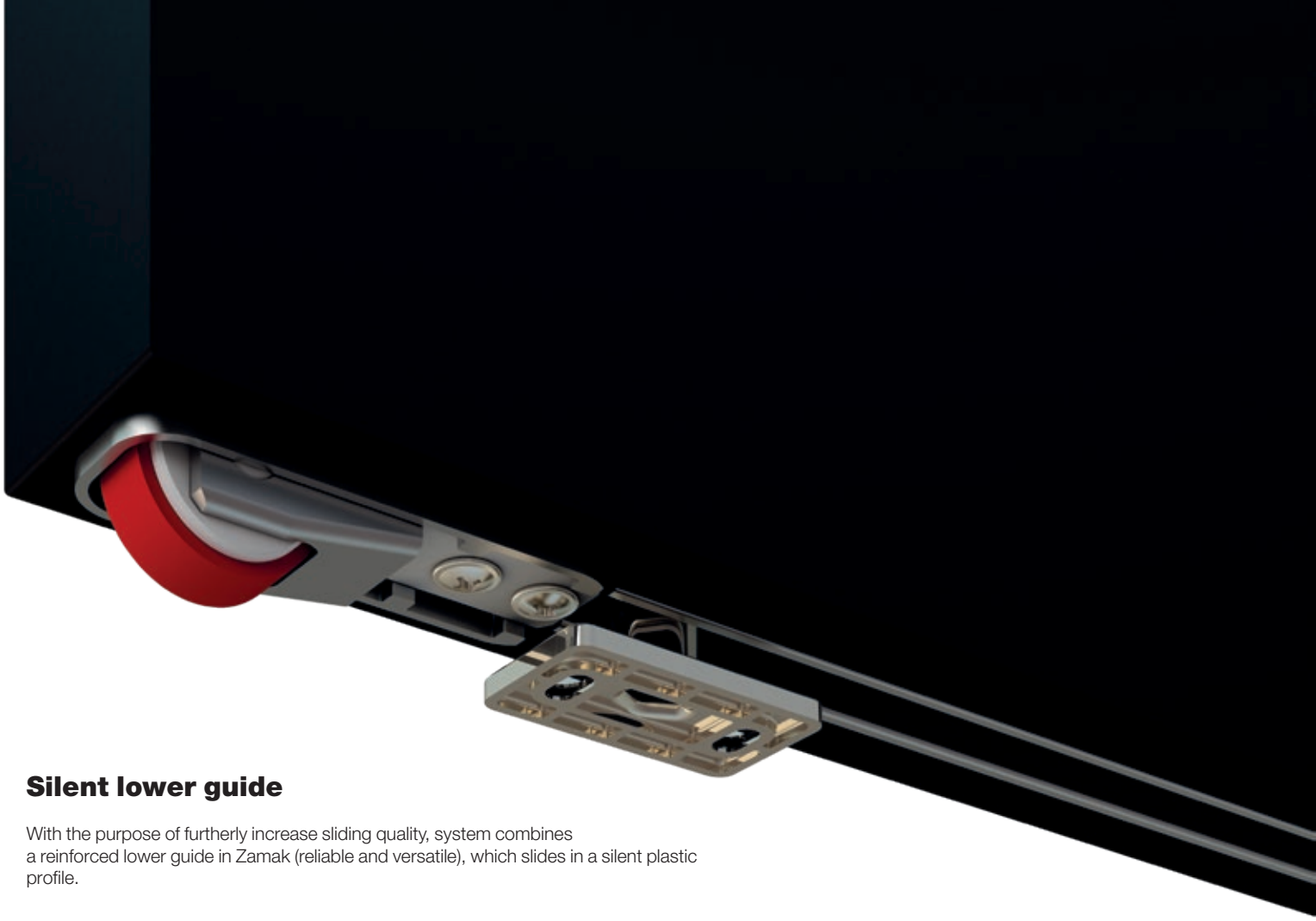

Silent lower guide

With the purpose of furtherly increase sliding quality, system combines a reinforced lower guide in Zamak (reliable and versatile), which slides in a silent plastic profile.

New patented bottom wheels designed for a better sliding

New bottom wheels are equipped with a suspension spring system and were designed with a larger diameter, bigger bearing and steel pivots. Rubber surface have been enlarged as well, in order to reinforce wheels and improve sliding quality.
An additional important innovation in lower sliding system is the introduction of two padded fixed springs which can grant damping function during door motion up to 40kg. Over 40kg of door weight and up to 80kg of maximum load capacity, new bottom wheels will be more flexible than previous version, with their Zamak surface to lean on a rubber internal cylinder, which act as a small shock absorber, granting more stability during sliding motion.
The wheels rubber have hight performance:

- it does not leave any trace or sign on sliding surface like floors and walls
- it does not deform over time

KG 0 < KG 40

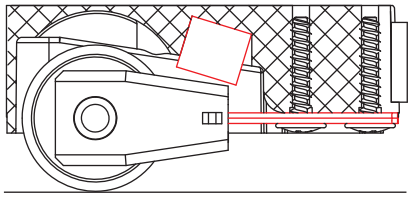

KG 40 < KG 80

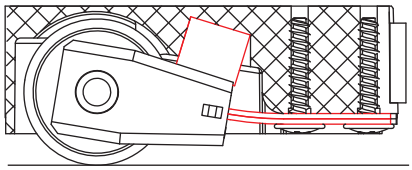

Built-in sliding track with not-through milling

Upper sliding track can be installed “built-in” into a blind milling. Laterally, track’s end caps won’t be visible, improving even more the aesthetics of door. Door installation and adjustment are not going to be different than usual, because available on the top of the door.

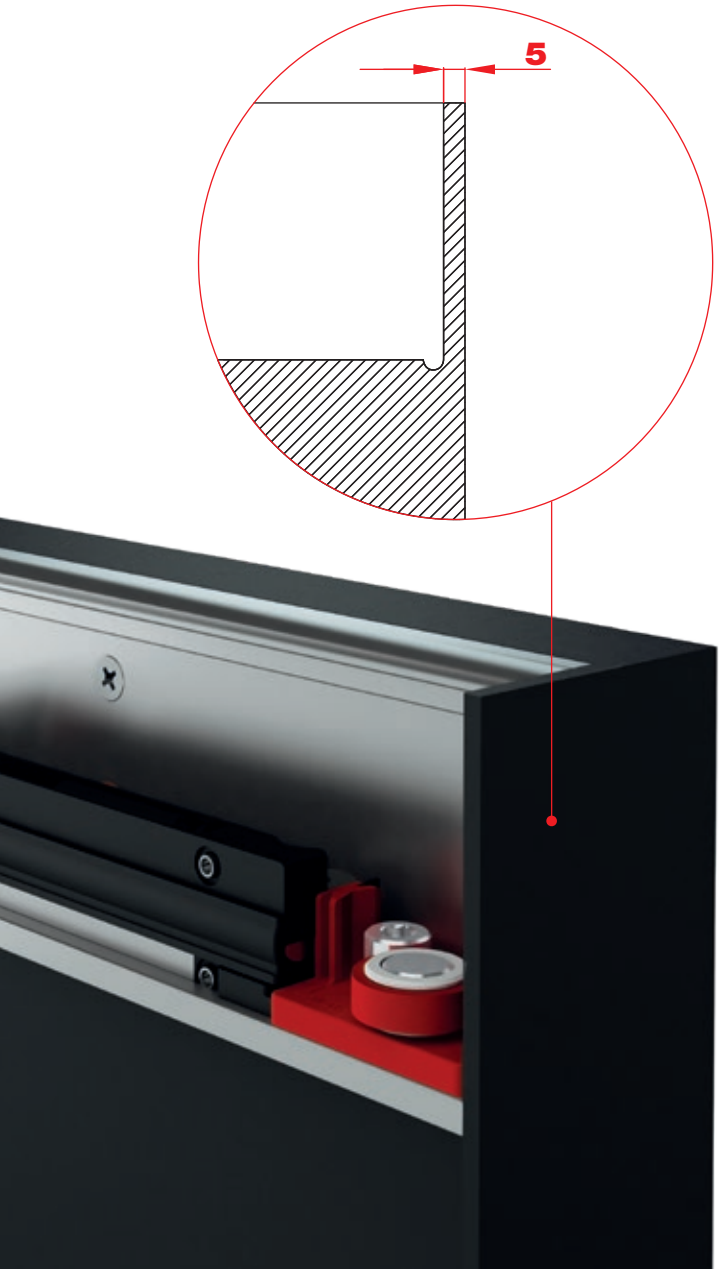

Minimal and linear design, with the highest resistance

The vertical upright with reduced dimensions will decrease visibility of extruded profiles. The lines will then result linear and clean. The gap, in the upper side of the door as in the bottom's, it is reduced out just like standard swing doors and no additional drilling or milling processing are needed. The sliding track external cover will shape with the door a continuous surface: everything contributes to confer to new **Universal** frame a minimal, but pleasent design.
Tubular extrued profiles, metal joints, maximal grip, load-bearing connectors, bi-extruded gaskets: All components contribute to grant the glass weight to be sustained by vertical uprights and horizontal crosstracks, halving the pressure of it.

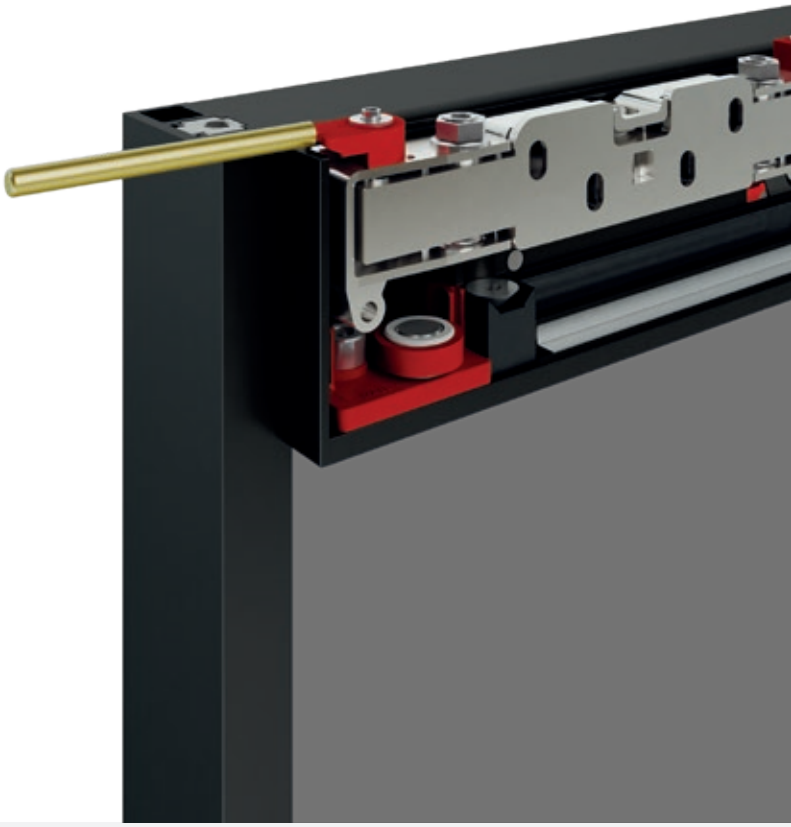

"The new UNIVERSAL frame is the perfect answer to the demand of an elegant, performant and high resistant product"

Versatility and resistance

The new **Universal** frame's extruded profiles are tubular in order to grant maximum resistance and are assembled by metal joint connectors, without any additional drilling precessing requirement: This allows to cut profile's bars to favourite size, with no additional drilling or milling precess, always granting the best grip.

Essential and modern design

The vertical upright has been designed with reduced dimensions in order to extremely limitate the visual impact of extruded profiles. The sliding track's external aluminium cover alligned with the door, it is shaping a continuous and pleasent line. Profiles and accessories are available in different finishings, from lighter to darker colours, as per latest design trends.

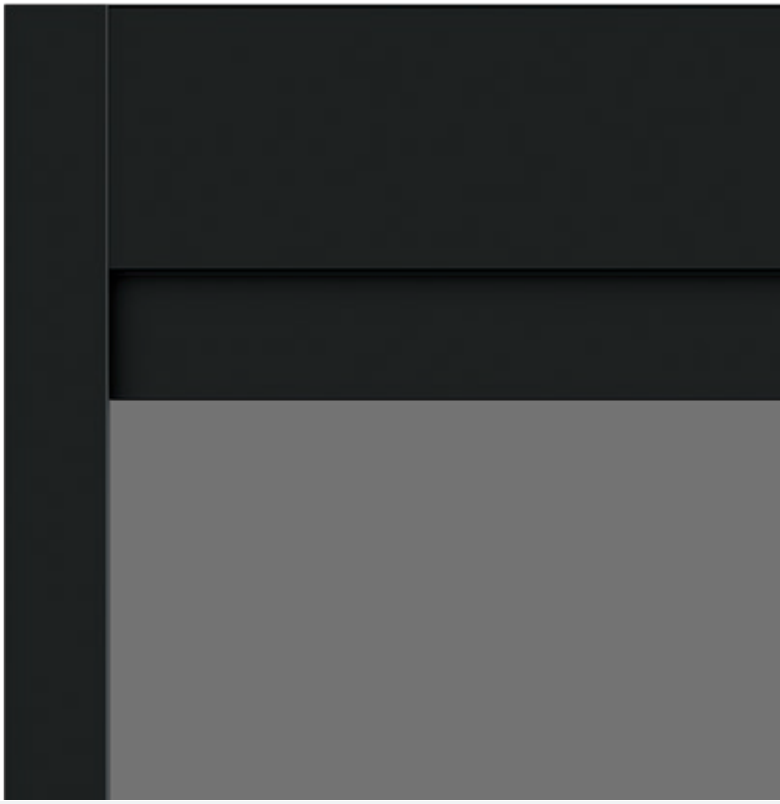

Reduced vertical and horizontal gap

Into the horizontal crosstrack are inserted dustcover brushes, allowing to fill the gap either in the bottom, as in the upper side, towards the external cover. According to that, horizontal or vertical door's gap will result extremely reduced.

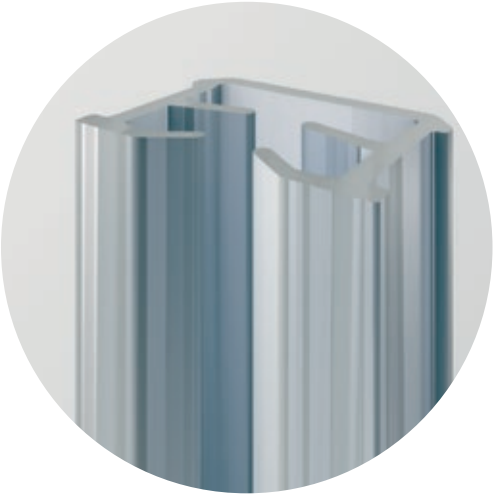

Dedicated to monolithic and laminated glass

Thanks to innovative extruded profiles, **Universal** frame result to be higly resistant. Furthermore, it has been realized an innovative bi-extruded gasket which allows an optimal grip of glass. The bi-extruded gasket will allow to use monolithic and laminated glasses from 5 up to 8,5 mm thickness.

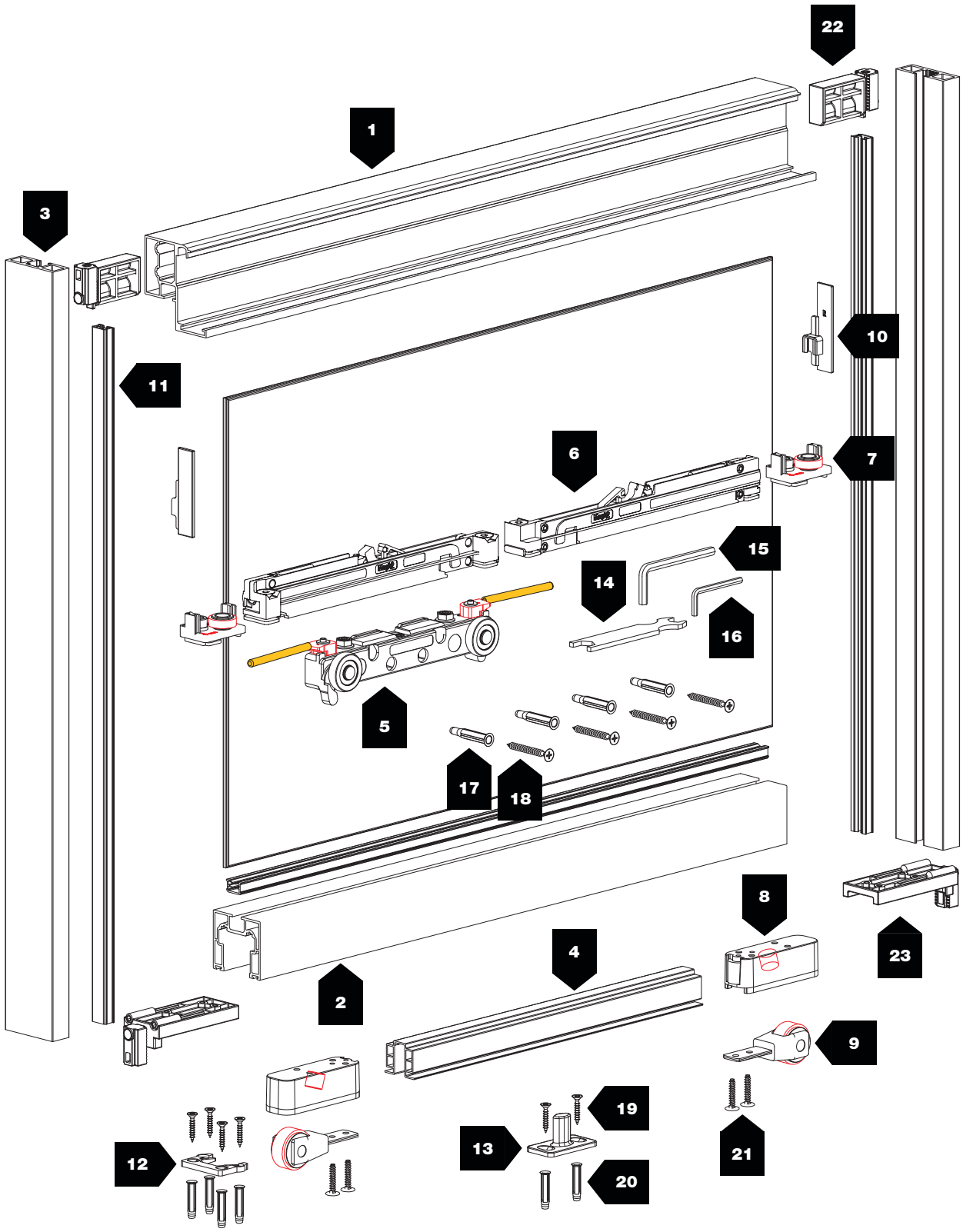

680 ÷ 1500 mm

80 kg

10 mm

COLORS

- Brushed Anodized Silver
- Brushed Anodized Nickel
- Brushed Anodized Graphite
- Brushed Anodized Dark Brown
- Brushed Anodized Black

N°			kg	
1	2780	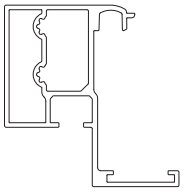	–	
2	2778	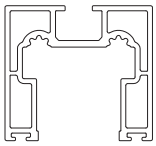	–	
3	2761	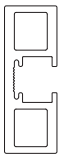	–	
4	2860	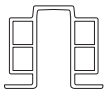	–	
5	2852	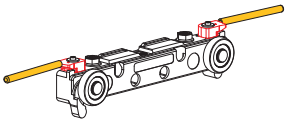	80	PATENTED
6	2864-80	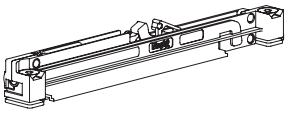	80	PATENTED
7	2856	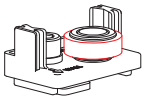	–	PATENTED
8	2858	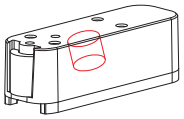	80	PATENTED
9	2857	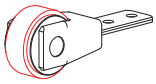	80	PATENTED
10	2899	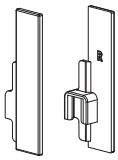	–	
11	2751		–	
12	2859	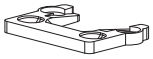	–	

N°			kg	
13	2855	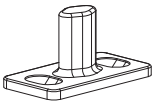	–	
14	1025		–	
15	538	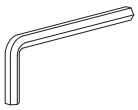	–	
16	654	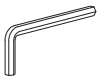	–	
17	FISCHER UX6	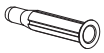	–	
18	4,5x40		–	
19	4x30		–	
20	FISCHER SX5		–	
21	4x20		–	
22	2774_DX 2774_SX	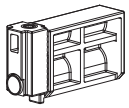	80	
23	2776	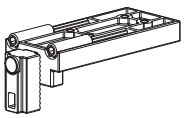	80	

80 kg

N.2 Soft damper stoppers

Customizable door width

Patented system

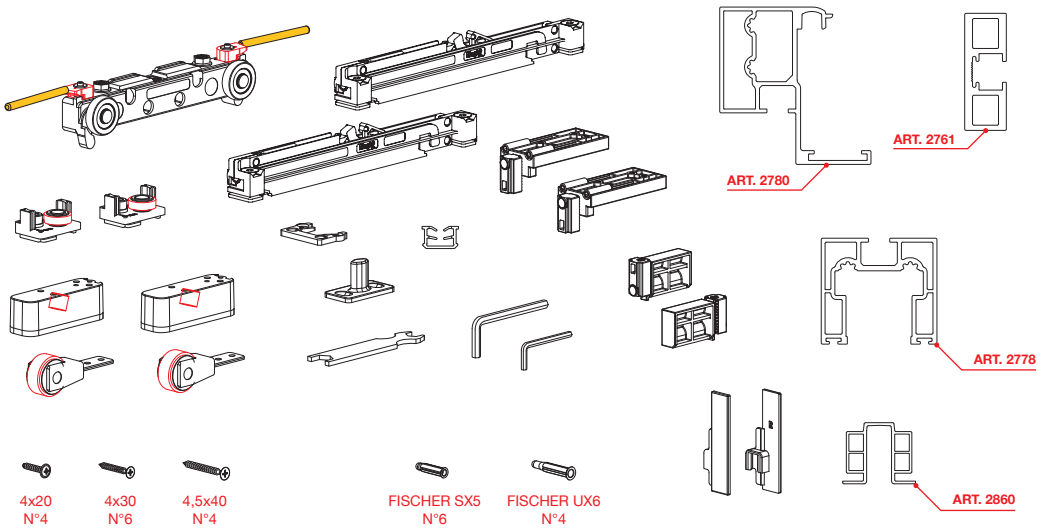

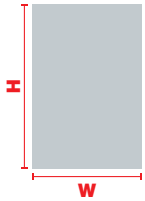

W	H
1100 mm	2200 mm
	2600 mm
	3000 mm
1500 mm	2200 mm
	2600 mm
	3000 mm

COLOURS

AS | NKS | GRFS | E3S | NS

MIN

MEASUREMENTS DESCRIPTION

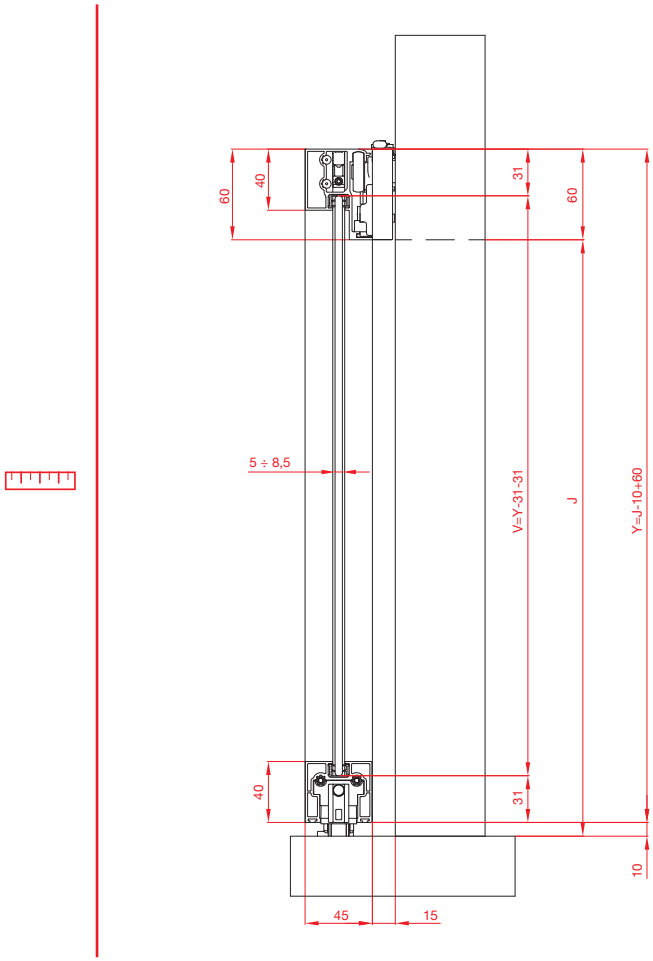

GLASS SIZE CALCULATION TABLE

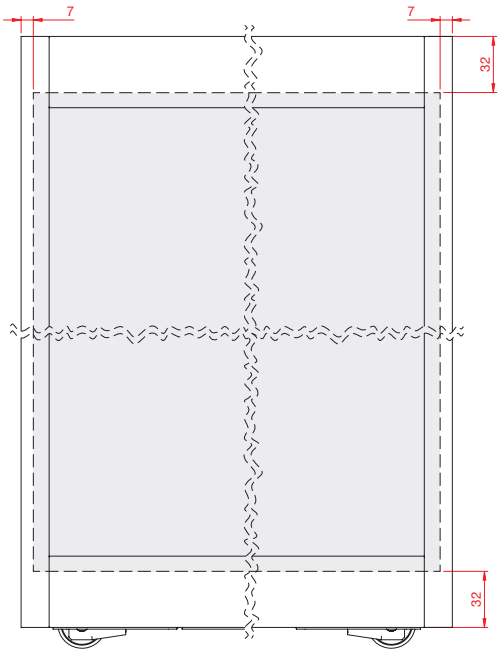

PROFILES CUTTING MEASUREMENTS

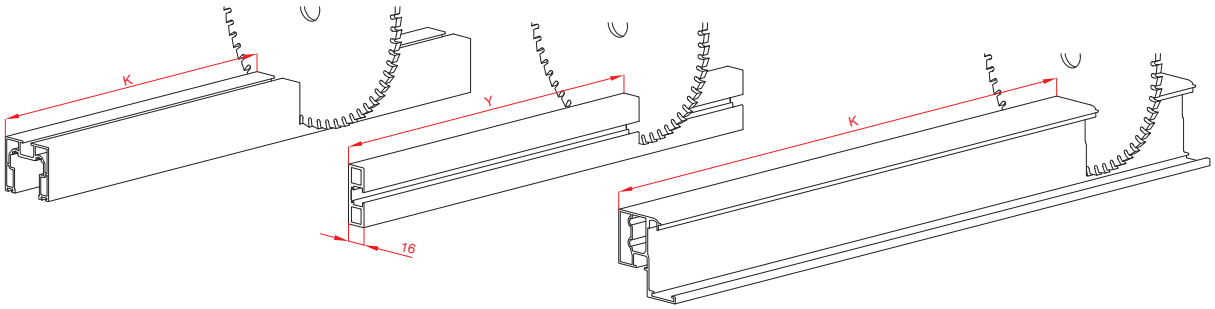

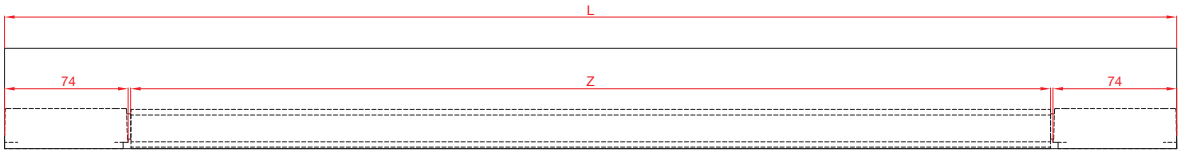

ART. 2858 **ART. 2858**

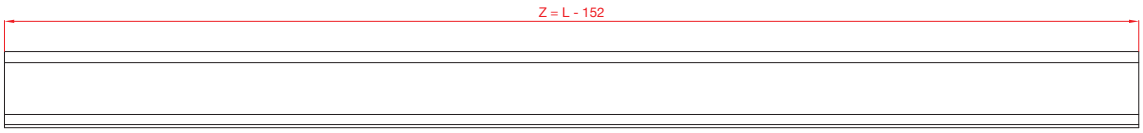

ART. 2860

ACCESSORIES PLACEMENT (STANDARD POSITION)

LEFT OPENING

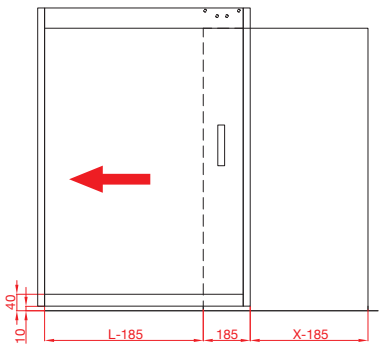

RIGHT OPENING

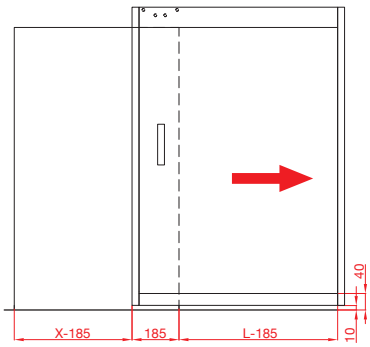

X = Min. 818 mm *(L = 850)*
X = Max. 1468 mm *(L = 1500)*

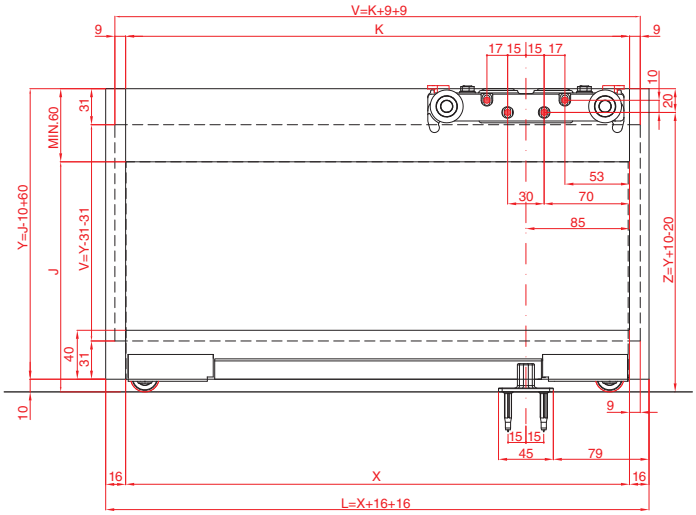

ACCESSORIES PLACEMENT (INTERMEDIATE POSITION)

LEFT OPENING

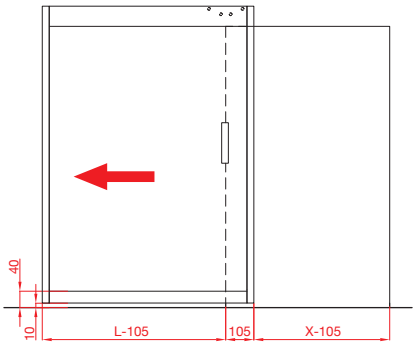

RIGHT OPENING

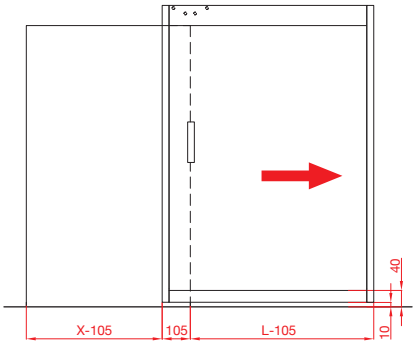

X = Min. 733 mm *(L = 850)*
X = Max. 1383 mm *(L = 1500)*

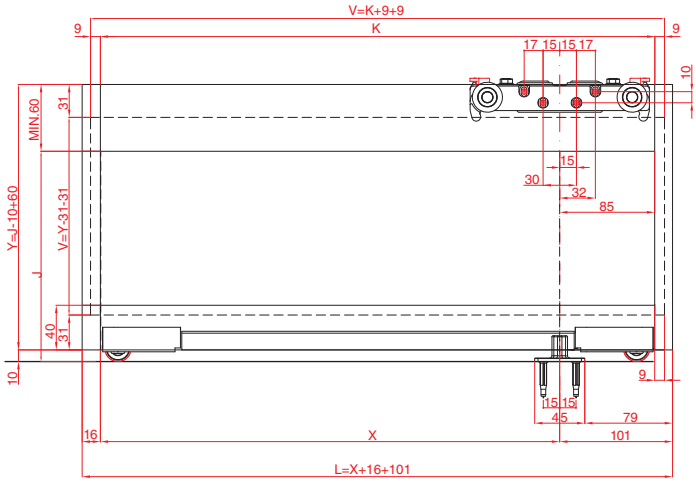

ACCESSORIES PLACEMENT (TOTAL OPENING POSITION)

LEFT OPENING

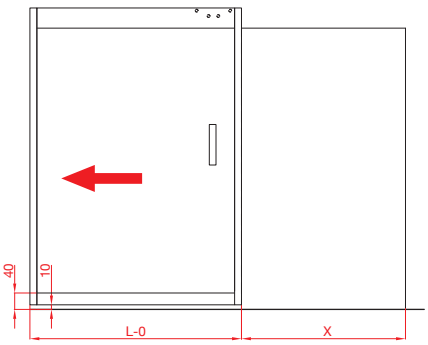

RIGHT OPENING

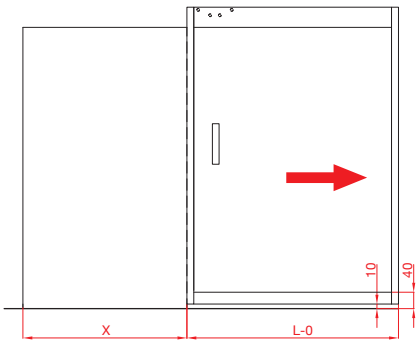

X = Min. 632 mm *(L = 850)*
X = Max. 1282 mm *(L = 1500)*

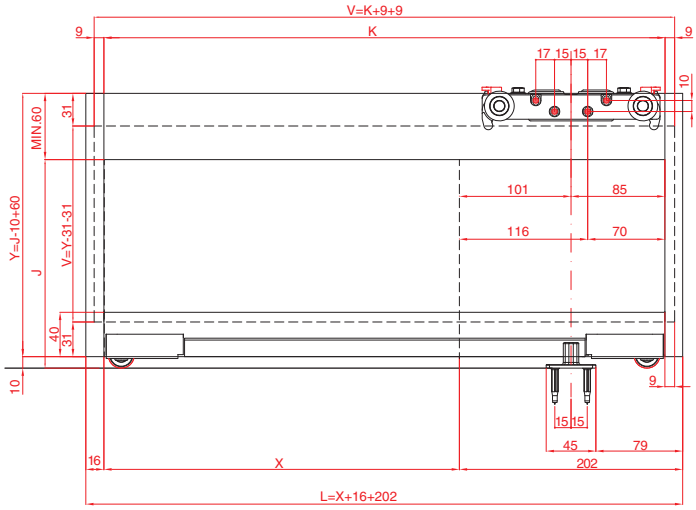

ART. 2859 - END STOPPER

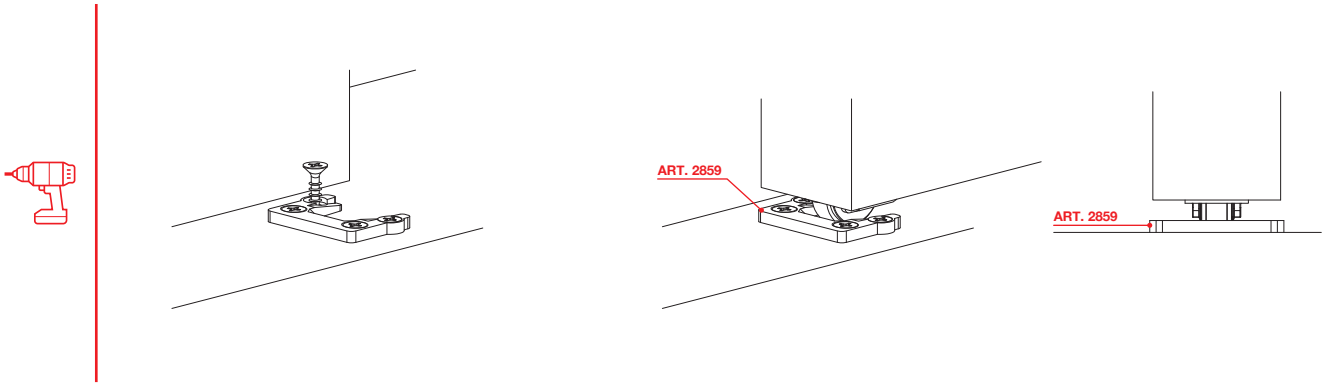

ALUMINIUM TRACK FOR IRREGULAR FLOOR

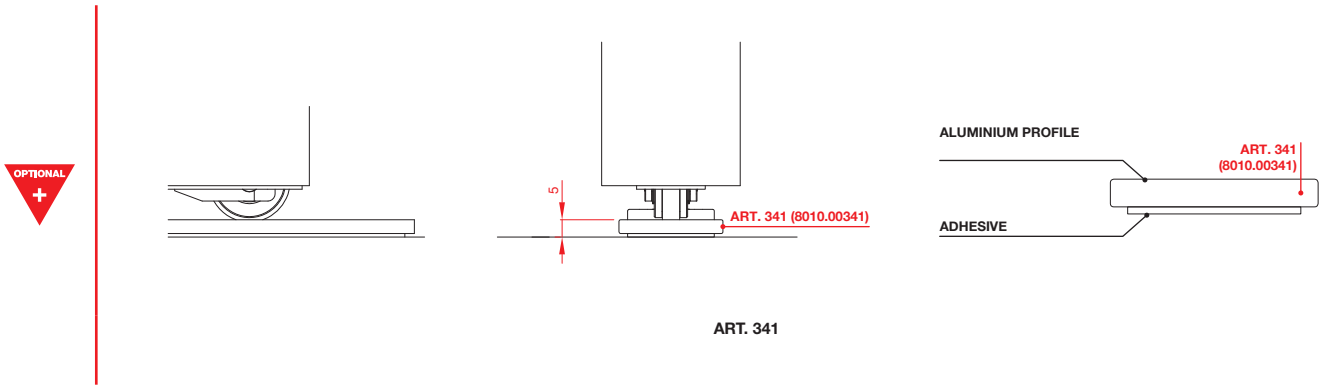

ART. 341