Einbauklappbetten Bettlift
Bettlift Built-in Foldaway Beds
Lits escamotables encastrés Bettlift
Camas rebatibles de montaje
Elevador de la cama

271.91.114/115
271.91.145/146
271.91.135/136

732.27.270

HDE 13.01.2017

Lattenrostauflage mit einliegender Front
Slatted mattress support with recessed front
Sommier à lattes à façade affleurante
Somier de madera con frente integrado

Liegefläche Surface area Surface de couchage Superficie de apoyo	**900 x 2000 mm**	**900 x 2000 mm**	**1400 x 2000 mm**
Nutzlast Load capacity Charge utile Carga útil	**44 - 55 kg**	**44 - 55 kg**	**60 - 80 kg**

Art.-Nr. Cat.No. Réf. N°de ref.

271.91.114/115

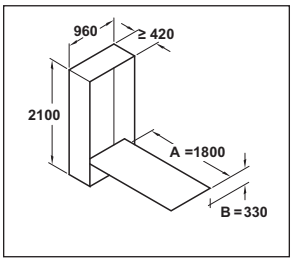

Einzelbett
Single bed
Lit simple
Cama individual

271.91.145/146

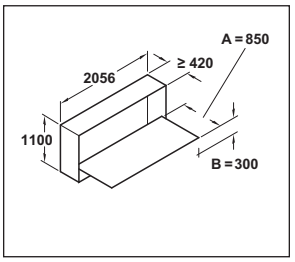

Querliegendes Einzelbett
Side-folding single bed
Lit simple transversal
Cama individual transversal

271.91.135/136

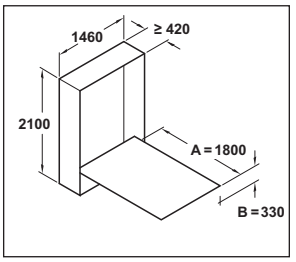

Französisches Bett
French bed
Grand lit
Cama francesa

271.87.101

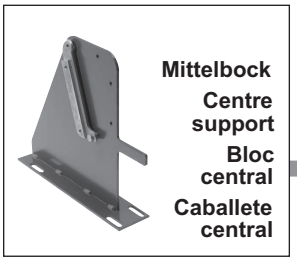

Mittelbock
Centre support
Bloc central
Caballete central

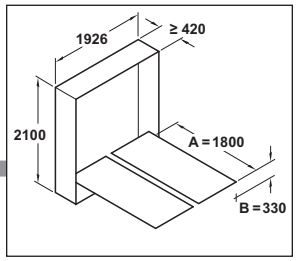

Doppelbett
Double bed
Lit double
Cama doble

732.27.270

Die angegebenen Korpusmaße sind lichte Schrankinnenmaße **- die unbedingt -** eingehalten werden müssen.

The dimensions listed are internal cabinet dimensions which must be **absolutely** adhered to.

Les dimensions de meuble indiquées sont les dimensions intérieures de l'armoire qui doivent être **- absolument -** respectées.

Las medidas indicadas del cuerpo son medidas libres del interior del ammario, cuya observación es **imprescindible.**

Hinweis:/Note:/Inducation:/Observaciòn:

A = inclusive Fuß
B = Oberkante Latten
Nutzlast: Frontplatte, Matratze, Bettzeug und evtl. Bettumrandung. Bei einem abweichenden Gesamtgewicht bitten wir um Information, damit für Ihre Bestellung stärkere oder schwächere Federn eingebaut werden.

A = including leg
B = to top edge of slatted
Load capacity: front panel, mattress, bedding and possibly also a bed border. In the case of any deviations in total weight, please inform us so that we can install stronger or weaker springs for your order.

A = pied inclus
B = bord supérieur du sommier à lattes
Charge utile: façade matelas, literie et éventuellement bordure de lit. Pour un poids total différent, nous vous demandons de bien vouloir nous informer afin que nous puissions monter des ressorts plus forts ou plus faibles pour votre commande.

A = pata incluida
B = canto superior del somier de madera
Carga útil: placa frontal, colchón y funda
Por favor informenos, en caso de un peso total diferente, a fin de montar muelles más fuertes o más débiles, de acuerdo con su pedido.

732.27.270

271.87.101

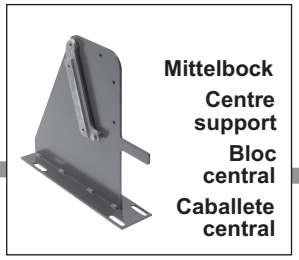

Mittelbock
Centre support
Bloc central
Caballete central

Einzelbett
Single bed
Lit simple
Cama individual

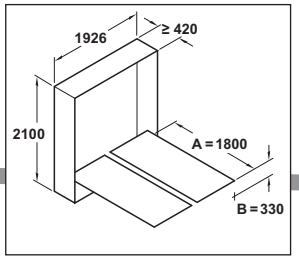

Doppelbett
Double bed
Lit double
Cama doble

Doppelbett
Durch die Verwendung des Mittelbocks können zwei Einzelbetten nebeneinander -ohne Mittelseite- montiert werden.

Double bed
Two single beds can be assembled side by side without a centre panel by using the centre support.

Lit double
L'utilisation du bloc central permet de monter deux lits simples côte à côte, sans partie centrale.

Cama doble
Con ayuda del cabalette central es posible montar dos camas individuales una junto a la otra, sin parte central.

271.98.100

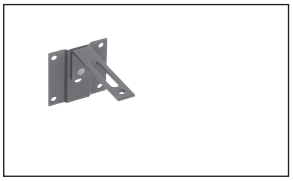

Sicherungs-Beschlag
zum Sichern von Klappbetten, nach EN 1129

Securing bracket
for securing foldaway beds, complies with EN 1129

Ferrure de sécurité
pour retenir les lits escamotables, selon la norme EN 1129

Herraje de seguridad
para asegurar las camas rebatibles, según norma EN 1129

D Lesen Sie diese Montageanleitung sorgfältig durch, bevor Sie den Bettlift montieren.

GB Read these assembly instructions carefully before installing the Bettlift.

F Lisez les instructions de montage soigneusement avant de monter le Bettlift.

E Por favor, leer estas instrucciones de montaje cuidadosamente, antes de instalar el elevador cama

Beachten Sie bitte die Korpusmaße und die Hinweise auf Seite **2** und **3**.

Please observe the cabinet dimensions and the notes on pages **2** and **3**.

Prière d'observer les dimensions du meuble et les notes aux pages **2** et **3**.

Sírvanse respectar especialmente las indicaciones de securidad en la página **2** y **3**.

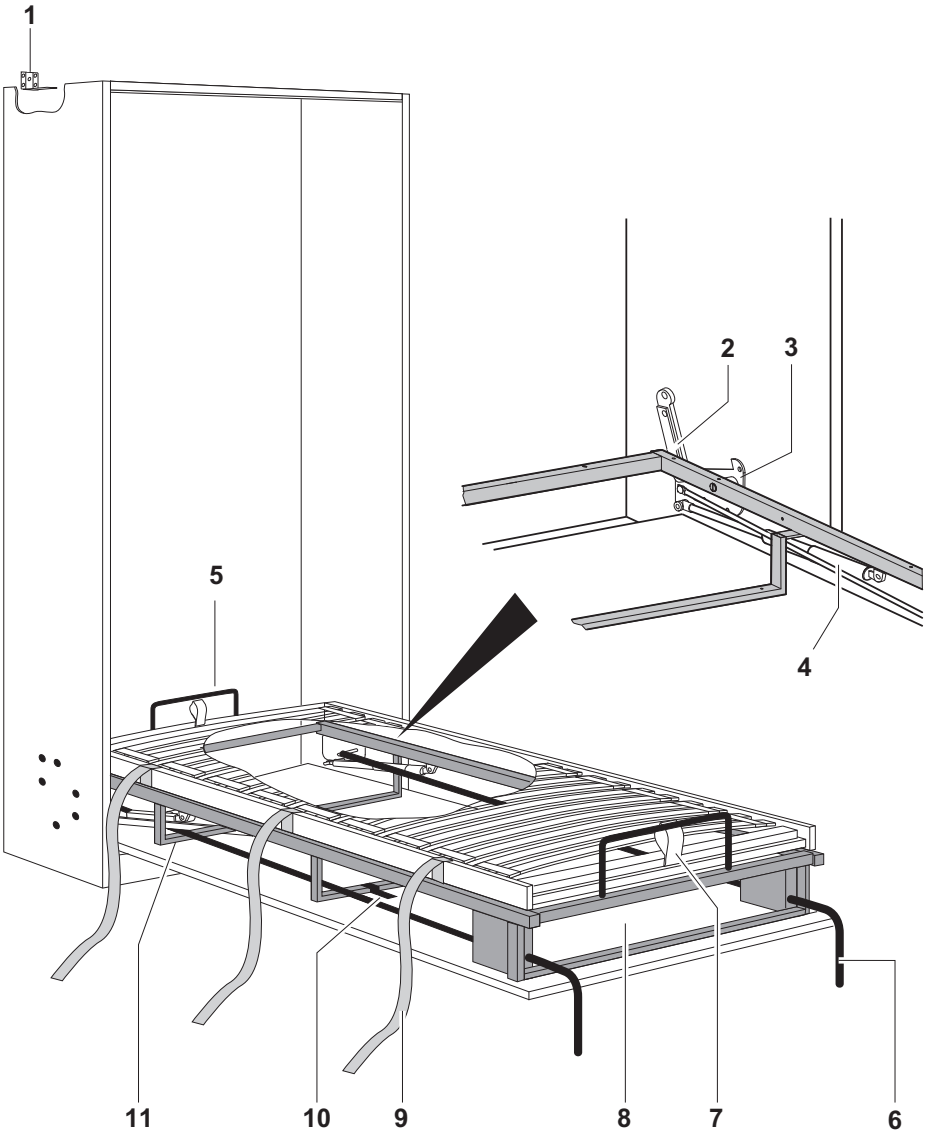

732.27.270

GB

Cabinet dimensions

There must be a gap between front panel and cabinet so that the Bettlift can be operated.

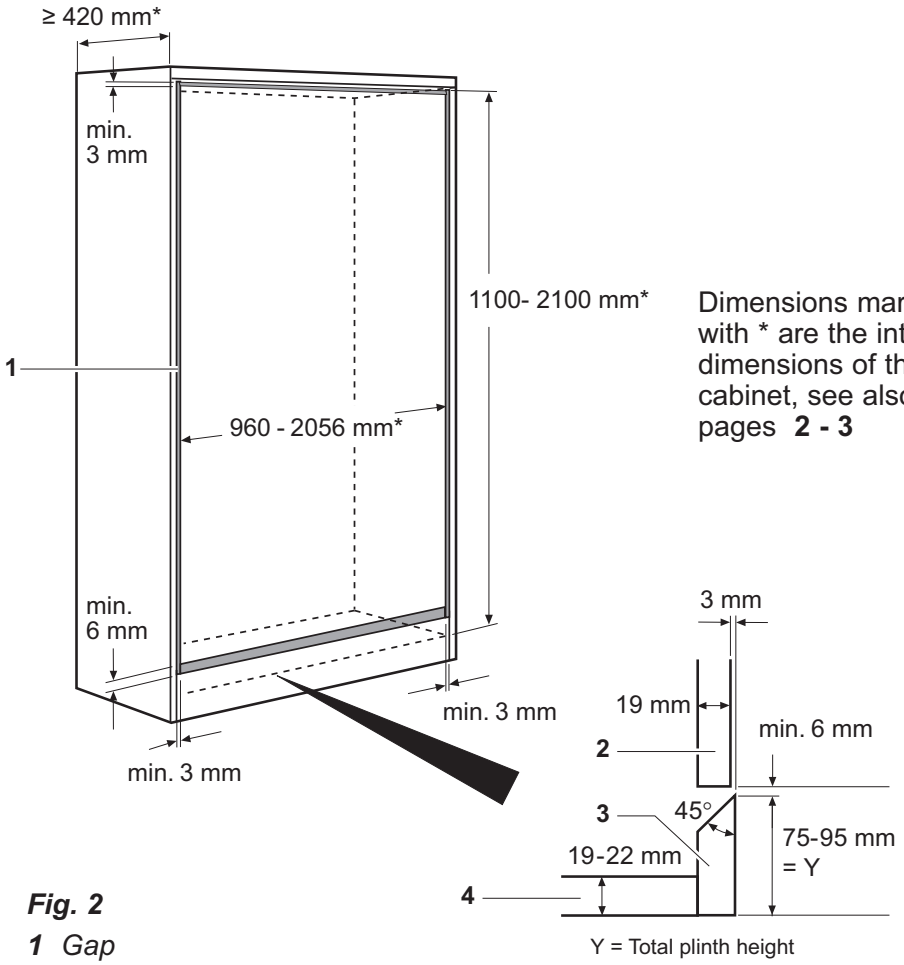

Dimensions marked with * are the internal dimensions of the cabinet, see also pages **2 - 3**

Fig. 2

1 *Gap*
2 *Front panel*
3 *Base panel*
4 *Base panel*

Material for the cabinet: (with double beds*)

	Material	**Material thickness**
Upper base	Chipboard	19 - 22 mm
Side walls	MDF	19 - 22 mm
Lower base	Chipboard (MDF*)	19 - 22 mm
Base panel	Chipboard	19 - 22 mm
Front panel	Chipboard	19 mm

732.27.270

HDE 23.05.2013

GB

Assembly preparation

Check delivered goods.

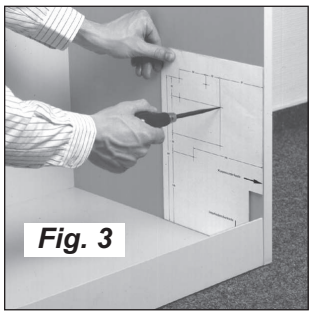

Fig. 3

Use the drilling template to mark the six holes to be drilled on the inside of the left and right side walls.

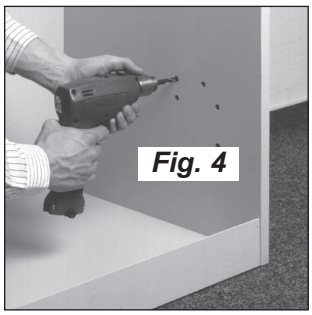

Fig. 4

Drill holes with 9 mm diameter through each side wall and countersink slightly from outside with 12 mm diameter.

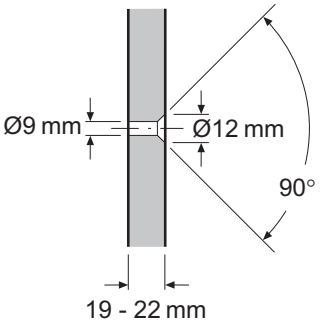

Fig. 5

Affix each of the two retainer brackets with two countersunk-head screws M8 x 30 mm.

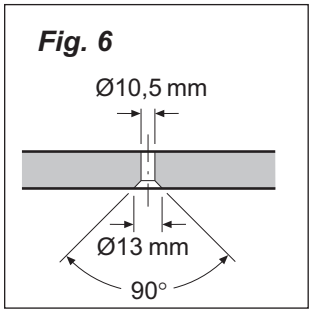

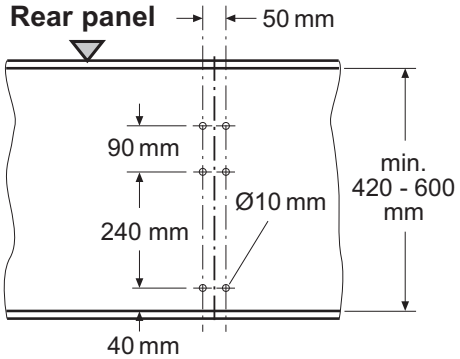

Fig. 6

With double beds, drill through the lower base of the cabinet as shown in diagram on the left and countersink slightly from below with 13 mm diameter.

732.27.270

HDE 23.05.2013

GB

Securing Bettlift against tilting

At the place of installation check the floor and wall for evenness and stability.

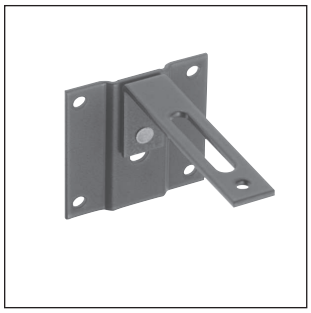

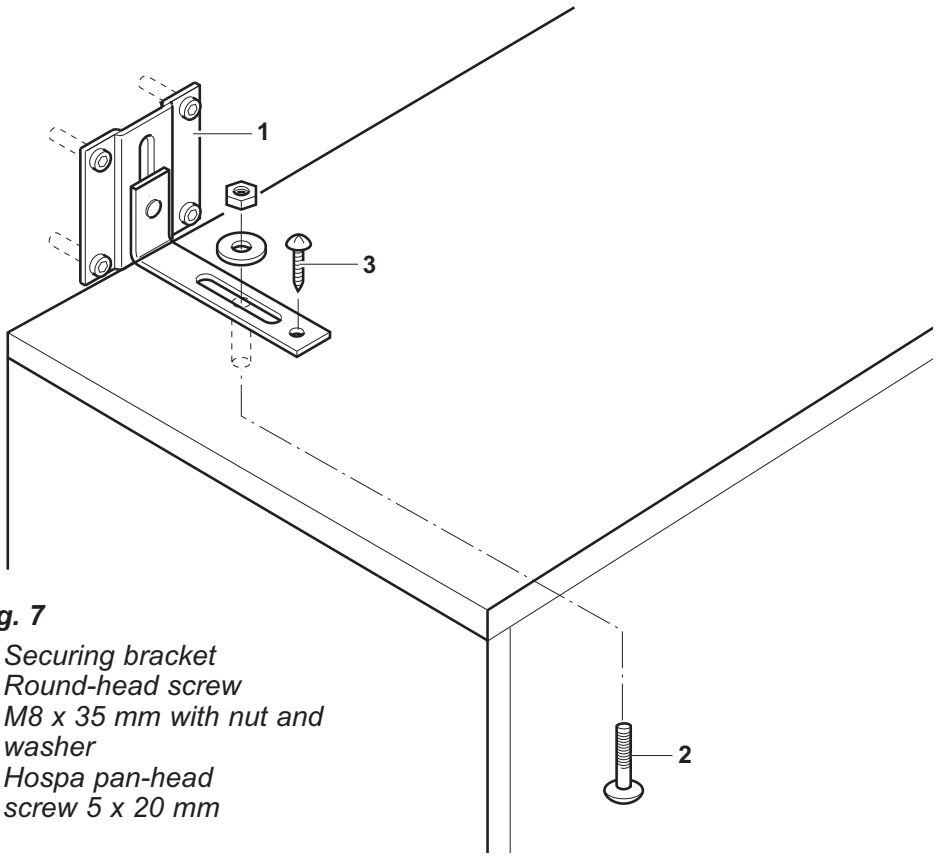

Fig. 7

1 *Securing bracket*
2 *Round-head screw M8 x 35 mm with nut and washer*
3 *Hospa pan-head screw 5 x 20 mm*

- Fix each of the two securing brackets ***1*** (see ***Fig. 7)*** to the wall with four screws. This fixing material is not included.
  Minimum retention force F_H is 400 N for each fixing point.

- Set up cabinet at place of installation.

- Fix each securing bracket to the cabinet with one round-head screw ***2*** and one Hospa screw ***3***, see ***Fig. 7***.

GB

Installing bed frame

Danger of injury from extending bed frame!

Before opening, make sure that there are no persons, animals or objects in the area of extension.

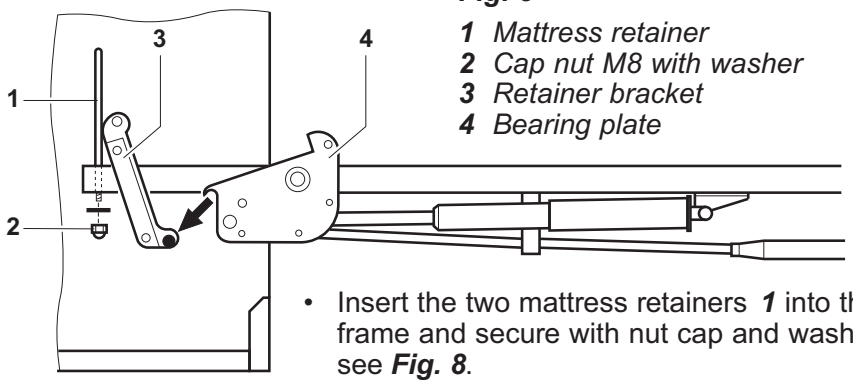

Fig. 8

1 *Mattress retainer*
2 *Cap nut M8 with washer*
3 *Retainer bracket*
4 *Bearing plate*

- Insert the two mattress retainers ***1*** into the bed frame and secure with nut cap and washer ***2***, see ***Fig. 8***.

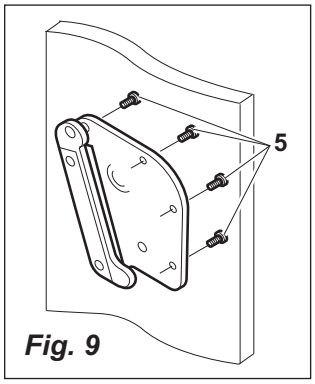

Fig. 9

- Position the bed frame in the cabinet so that the tips of the bearing plates ***4*** lie on the bolts of the retainer brackets ***3***.
- Swing the bed frame upwards into the cabinet in order to bring the bearing plates into the right position.
- Screw the bearing plates onto the side walls from outside using 4 countersunk-head screws ***5*** M8 x 30 mm, see ***Fig. 9***
- With double beds the centre support must be screwed to the lower base with 6 countersunk-head screws M10 x 40 mm, see ***Fig. 11***.
  A minimum gap of 6 mm must be maintained between both beds.
- Each of the two bearing plates ***4*** is screwed to the centre support with 3 hexagon-head bolts ***6*** M6 x 25 mm and hexagonal nuts M6, as well as with 2 hexagon-head bolts ***7*** M8 x 10 mm, see ***Fig. 10***.

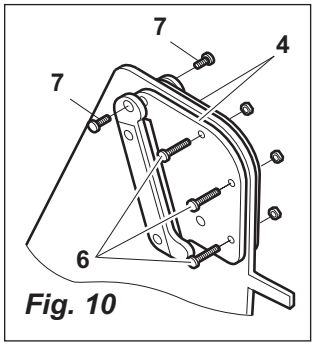

Fig. 10

Fig. 11

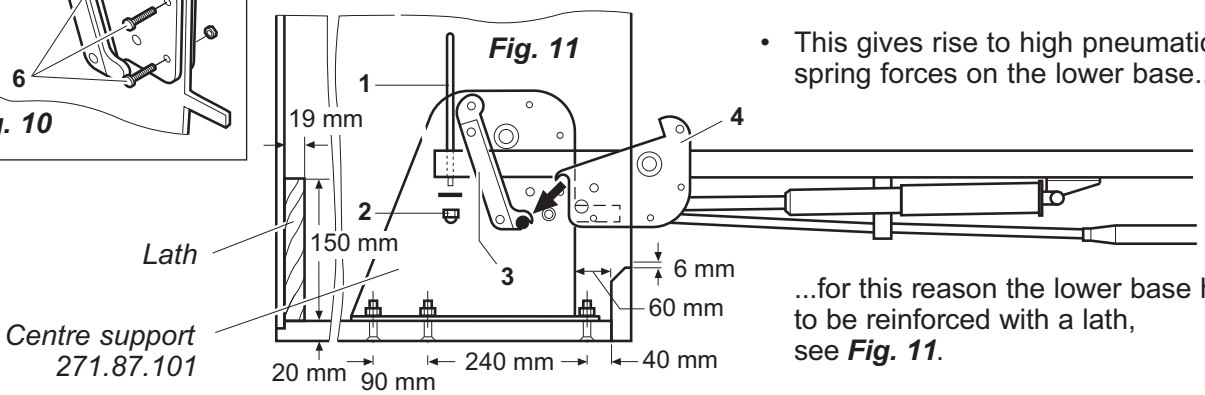

- This gives rise to high pneumatic-spring forces on the lower base...

...for this reason the lower base has to be reinforced with a lath, see ***Fig. 11***.

732.27.270

Preparing front panel

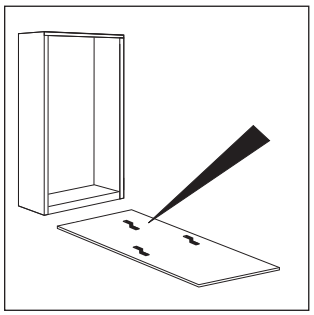

Bettlift with Cat. No.

271.91.114/115

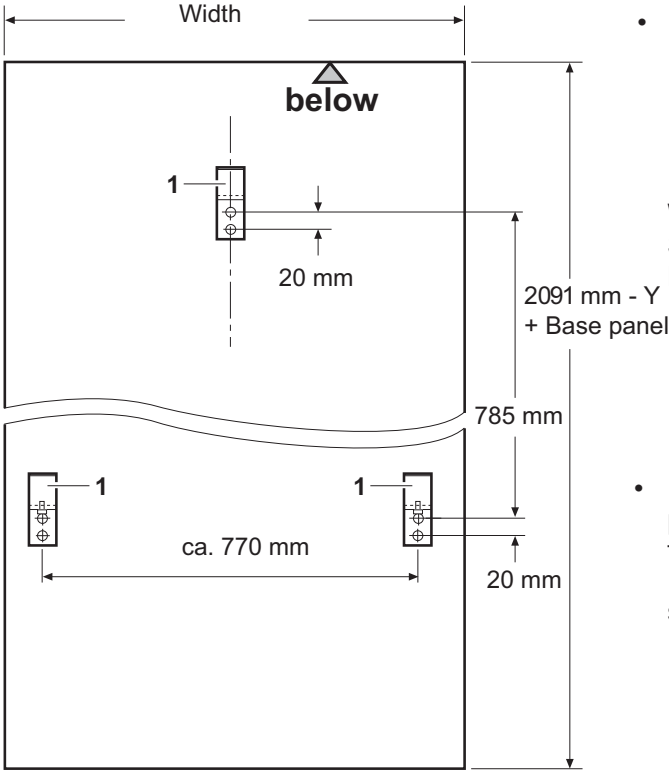

- Mark holes to be drilled on the inside of front panel and drill them.

Width:
Single bed = **954 mm**
Double bed = **957 mm**

- Firmly screw the front-panel brackets ***1*** to the front panel with two Hospa pan-head screws 4 x 17 mm.

Y = Total height of base panel, see ***Fig. 2*** on page 6

732.27.270

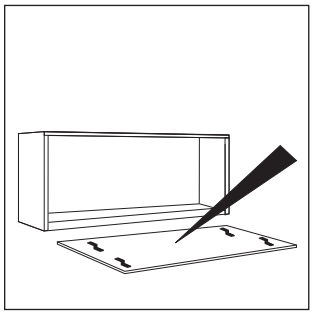

Bettlift with Cat. No.

271.91.145/146

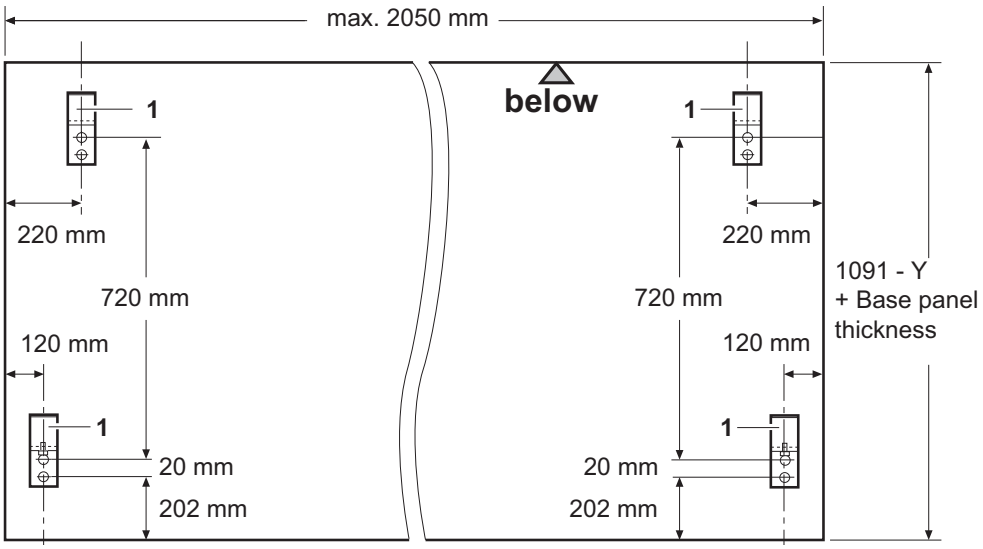

Preparing the front panel

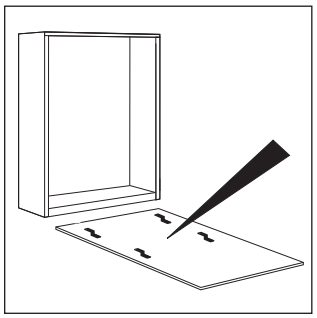

Bettlift with Cat. No.

271.91.135/136

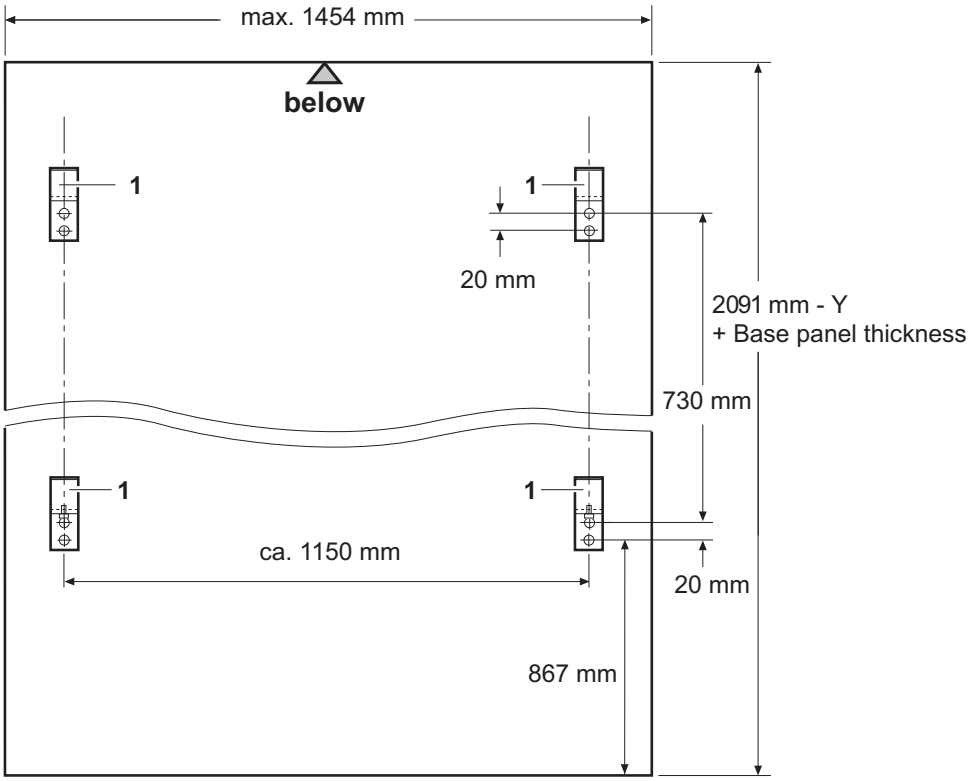

Y = Total height of base panel, see ***Fig. 2*** on page 6

732.27.270

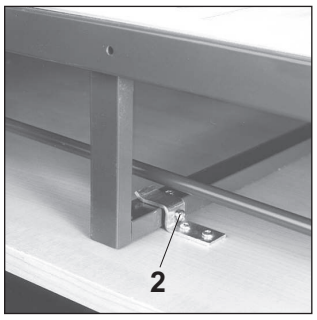

Fig. 12

2 *Raised-head screws M4 x 12 mm for adjusting the height of the front panel*

- Mark the holes to be drilled on the inside of the front panel and drill them.
- Firmly screw each front-panel bracket ***1*** to the front panel with two Hospa pan-head screws 4 x 17 mm.
- Screw the raised-head screws M4 x 12 mm ***2*** into the two upper front-panel brackets, ***Fig. 12***.
- Lay the front panel in front of the cabinet.

Installing front panel

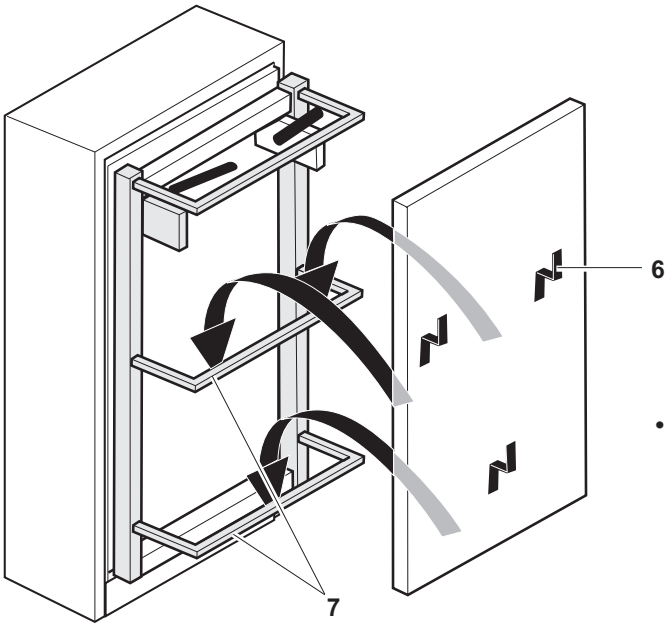

Fig. 13

6 *Front panel brackets*
7 *Middle and lower transverse tubes*

- Hang prepared front panel with front-panel brackets ***6*** on the transverse tubes ***7*** on the bed frame, see ***Fig. 13***.

732.27.270

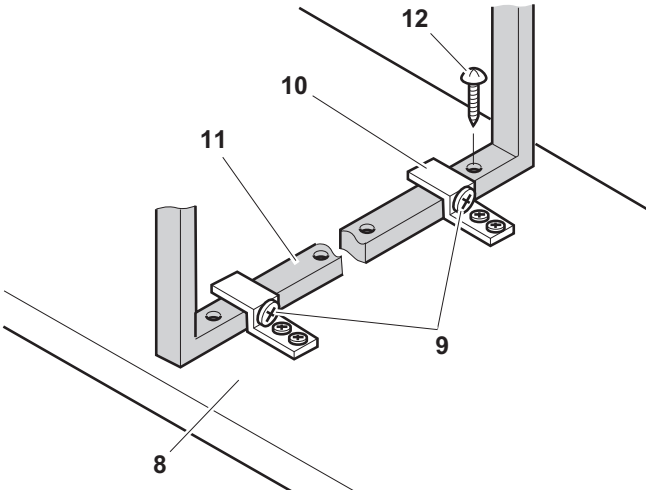

Fig. 14

8 *Front panel*
9 *Raised-head screws M4 x 10 mm*
10 *Front-panel brackets*
11 *Middle transverse tube*
12 *Hospa pan-head screws 4,5 x 30 mm*

- The front panel ***8*** is adjusted with the two raised-head screws ***9*** on the middle transverse tube ***11***, and fixed with a screw ***12***. If necessary, secure the bed frame and the front panel at the top with a G-clamp and check the front-panel gap, see ***Fig. 14***.

Securing front panel

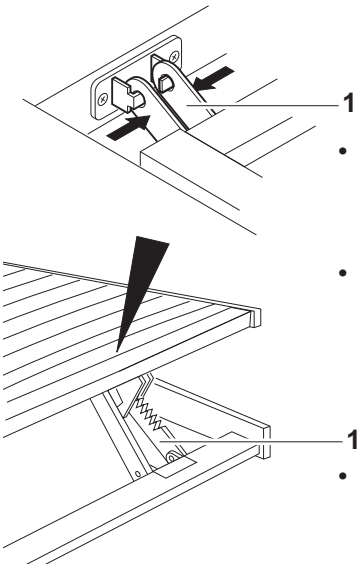

Fig. 15

1 *Stepped lifting device*

- Fully extend bed frame with installed front panel.
- Slightly lift slatted mattress support, press together stepped lifting device ***1*** and remove, fold up slatted mattress support, see ***Fig. 15***.
- Or, press laths out of lath pockets to screw on the front panel.

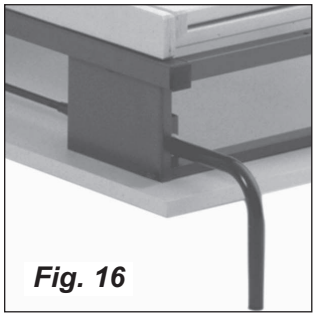

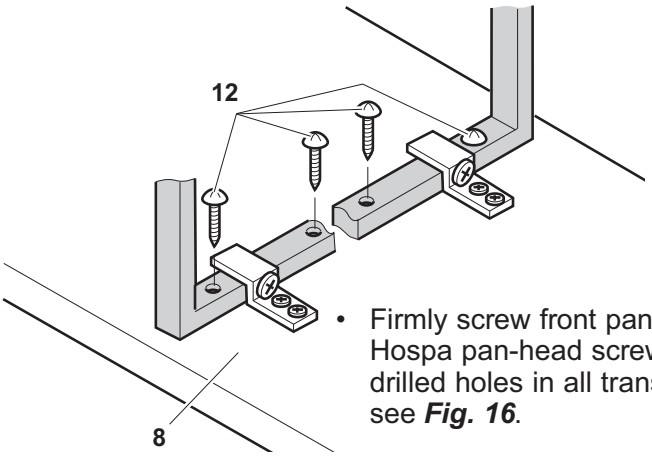

Fig. 16

12 *Hospa pan-head screws 4.5 x 30 mm and 4 x 17 mm for the pre-drilled holes*

- Firmly screw front panel ***8*** to bed frame with Hospa pan-head screws ***12*** through the pre-drilled holes in all transverse tubes, see ***Fig. 16***.

- Fold down mattress support again and reinstall stepped lifting device or put laths back into lath pockets.
- In order to prevent the Bettlift swinging more than 90° into the cabinet, we recommend fitting buffers at the top on the left and the right (alternatively a wooden lath can be used), see ***Fig. 17***.
- Lay mattress on the slatted support and secure with bedding retainer straps ***9***, see ***Fig. 1*** on page **4**.

732.27.270